The Know-How in Hermetic

Plug in®

Feed-Throughs

REVERSIBLE
MODULES

SPACE
SIMULATION

Hermetic
Feedthroughs

Vacuum
Technologies

MODULAR HERMETIC FEEDTHROUGH HANDBOOK 2019

20th Anniversary edition

www.plugin-vacuum.com

Feedthroughs by Plug In
Our philosophy of innovation

The human likes to create, to experiment, to solve problems. Its ability to innovate to tend to this ideal depends on the quality of the implementation of its intelligences. Innovation is a general principle related to the capabilities of a company to create or find new solutions. This is explained by :

1 - the placing on the world market of new or technologically significantly improved novelties, products and services
2 - the adoption within them of an innovation management, also based on changes and internal measures improving their actual implementation and real efficiency.

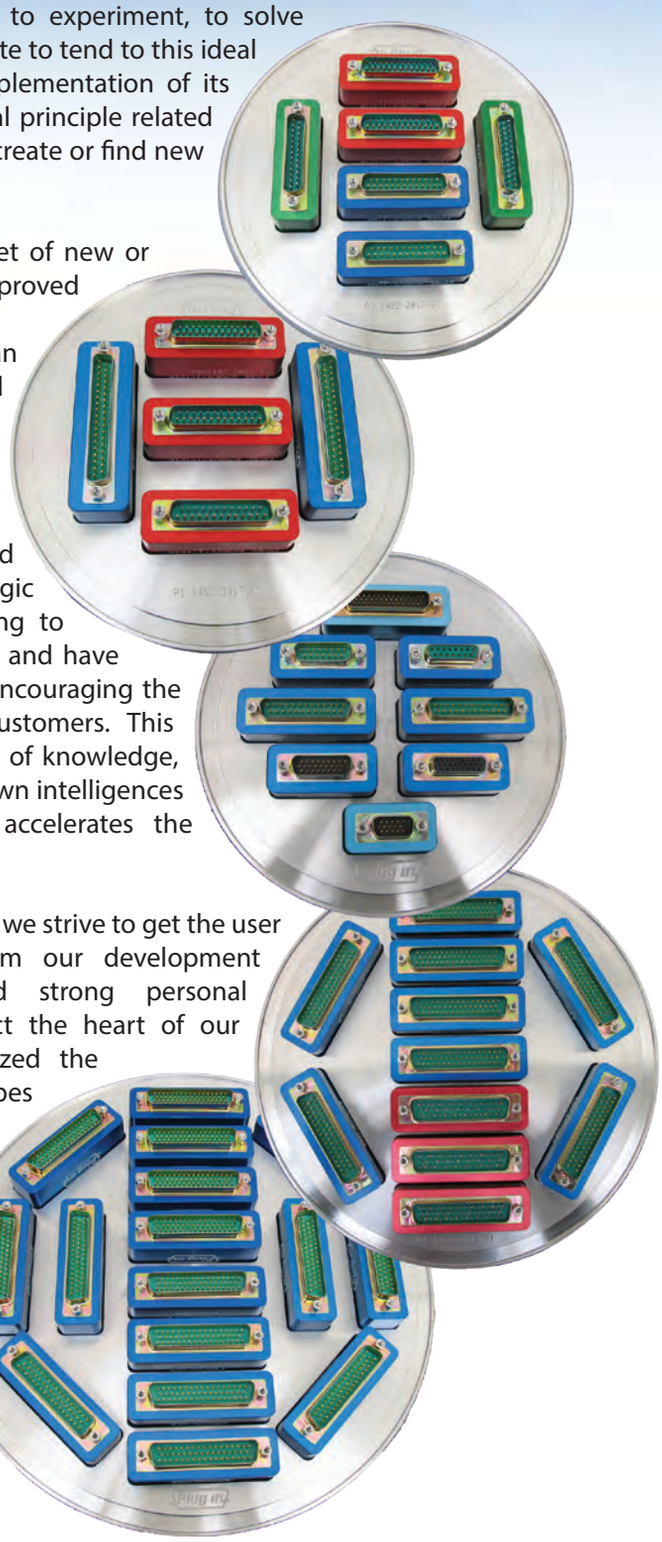

For nearly 20 years we have placed innovation at the heart of our strategic decisions, we have done everything to understand the needs of the users, and have opened the fields of reflection by encouraging the participation of suppliers and customers. This collaborative work with the sharing of knowledge, energizes the development of our own intelligences and mobilizing all intelligences, accelerates the emergence of innovation.

In our advanced technology sectors, we strive to get the user as far upstream as possible from our development programs. This helps to build strong personal relationships that positively impact the heart of our innovation. We have always realized the good ideas by launching prototypes and ended up with a product that perfectly meets the specifications and will last over time. The fact that within Plug In, we have always emphasized listening, analysis and sharing of knowledge with our professional interlocutors makes that our products have imposed themselves and have received the recognition of our customers all over the world.

On behalf of all the team we thank you for these magnificent last 20 years of innovation.

The Know-How in Hermetic Plug in Feed-Throughs ®

Table of contents

The Know-How in Hermetic

Plug in

Feed-Throughs ®

PLUG IN MAKES THE IMPOSSIBLE .....POSSIBLE

Established in 1999, Plug In is considered today as a reference in matter of development and manufacturing of original and reliable vacuum feedthrough solutions. Since its foundation, our R&D is using the most efficient 3D CAD software. With several patents, a proved production quality and a high service oriented support, Plug In is widely recognized for its capability to solve nearly all customers needs.

Experienced by the major users of the International research laboratories and the space industry, the Plug In vacuum feedthroughs remain unbeaten in terms of design, innovation and reliability.

We are commited to developp hermetic feedthroughs that reach the world advanced level and expand the application of these products in the vacuum market .

PLUG IN will never stop its innovations , based on the epoxy compound sealing , to always better fit your needs and even exceed them . We insure our customers are getting convenient , fast , reliable and considerate service .

We are proud of the trust of our customers , many of them for almost 20 years

AIRBUS DEFENCE & SPACE

AMOS ADVANCED MECHANICAL AND OPTICAL SYSTEMS

Angelantoni INDUSTRIE

ANGKASA MALAYSIA

aselsan

Ateliers de la Meuse

Australian National University

CASC 中国航天 CASC

中国科学院 CHINESE ACADEMY OF SCIENCES

DE LA RECHERCHE À L'INDUSTRIE cea

CETC

cnes CENTRE NATIONAL D'ÉTUDES SPATIALES

cnrs dépasser les frontières

CONAE

CSL

esa

iABG

IAI ISRAEL AEROSPACE INDUSTRIE

इसरो isro

jenaoptronik

KAI KOREA AEROSPACE INDUSTRIES, LTD.

KARI KOREA AEROSPACE RESEARCH INSTITUTE

NASA

RAL Space

TAI

ThalesAlenia Space

TÜBİTAK UZAY

Standard ougassing report

The Know-How in Hermetic Plug in Feed-Throughs ®

Feedthrough sealed with ESA / NASA qualified epoxy resin

Feedthrough Leak rate

$\leqslant 1.10^{-8}$ mbar l/s^{-1}
$\leqslant 1.10^{-8}$ atm cc/s^{-1}
$\leqslant 7{,}5.10^{-9}$ Torr l/s^{-1}
$\leqslant 1.10^{-9}$ Pa.m^3/s^{-1}

Specific outgassing rate at 1 h		
(background subtracted)		
Q total	4.4E-06	mbar·l / (s·cm²)
Q H2O	2.7E-06	mbar·l / (s·cm²)
Q CxHy	9.5E-10	mbar·l / (s·cm²)

Specific outgassing rate at 10 h		
(background subtracted)		
Q total	1.4E-06	mbar·l / (s·cm²)
Q H2O	8.7E-07	mbar·l / (s·cm²)
Q CxHy	4.9E-10	mbar·l / (s·cm²)

component	Durchführung (Zylinder, Schwarz)	
pumpingspeed	89	l/s
surface area	24	(d = 1.5; l = 4.1)
35-100 / 45-100	1.9	
Pgauge / Prga	7.9	

File :	
filename	Durchfuhrung (Epoxyd Harz).xls
datafile	030311_4.wbg
background	030226B4.wbg
material	Plastics
commisioner	Carl Zeiss

t = 1 hr:	Sample	Background	Unit
Q total	1.1E-04	5.7E-07	mbar·l / s
Q H2O	6.6E-05	1.4E-07	mbar·l / s
Q CxHy	2.8E-08	4.9E-09	mbar·l / s
p ion gauge	1.2E-06	6.5E-09	mbar

t = 10 hr:	Sample	Background	Unit
Q total	3.4E-05	1.6E-07	mbar·l / s
Q H2O	2.1E-05	1.7E-08	mbar·l / s
Q CxHy	1.4E-08	2.1E-09	mbar·l / s
p ion gauge	3.8E-07	1.8E-09	mbar

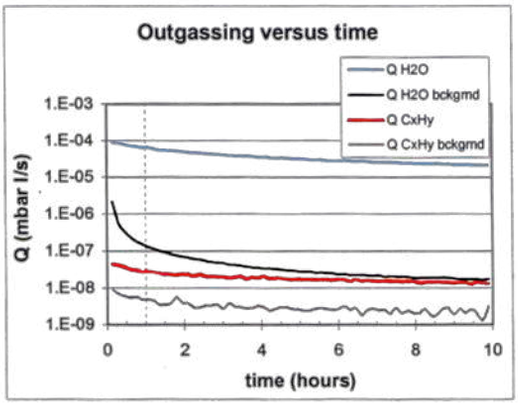

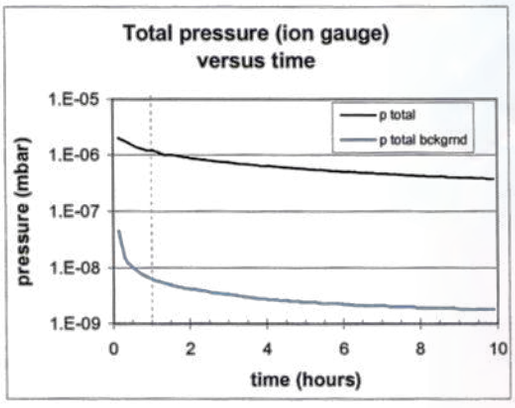

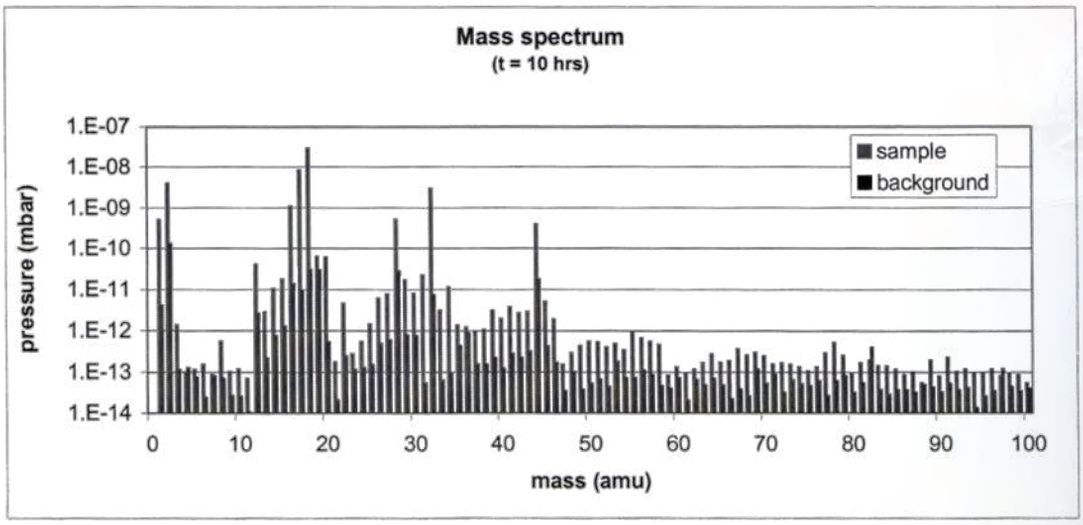

Mounting process

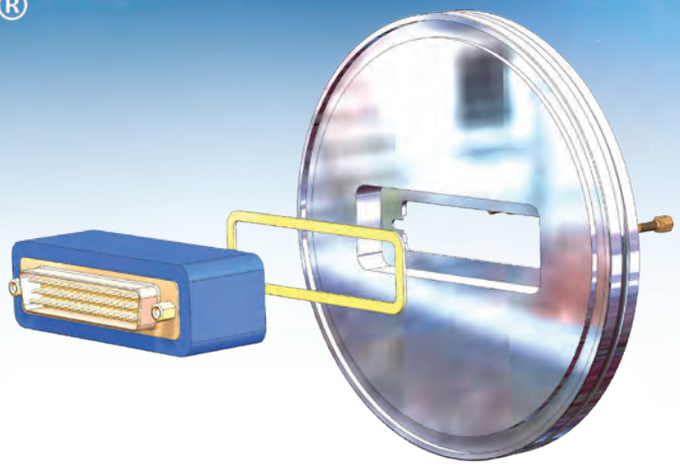

The products of the ERVAC range are totally removable and reversible.

1 - Dismount the 2 screws on the connector located at the vacuum side
2 - Properly clean the mounting flange with iso-propyl alcohol
3 - Properly clean the flat viton gasket with iso-propyl alcohol
4 - Place the flat Viton gasket in the bottom of the machined window (Air side)
5 - Place the ERVAC against the flat viton gasket (Air side)
6 - Tighten the 2 screws on the vacuum side by respecting the tightening torque (see below)

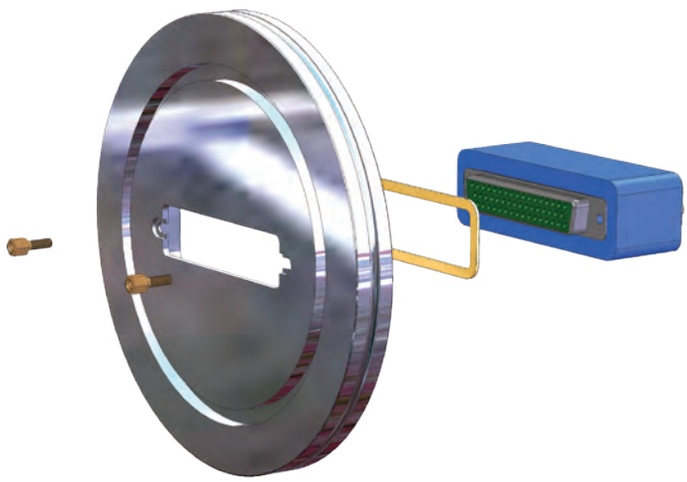

All surfaces should be cleaned before mounting. After first vacuum drop down, screws may be tightened again.

Recommended surface roughness < Ra 0,8 - Tightening torque : 1,2 N.m

Modules may be delivered as spare parts or fully assembled and tested on flange.

Leakrate : < 1.10-8 mbar.l/s - Temperature Range : -40°C / +80°C

Module dimensions

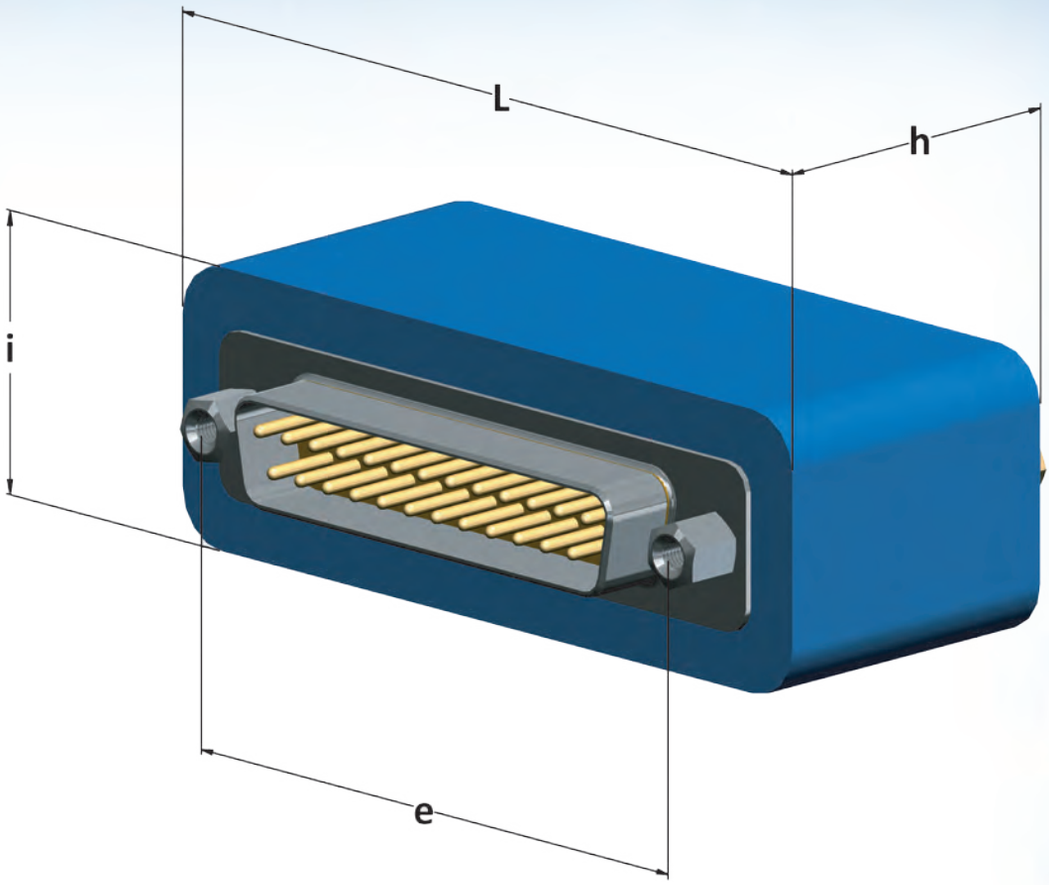

D-Sub Connector size	ERVAC Size	L	i	e	h
09 / 15 HD / 2W2	E	39,3	21	25	Dimension is depending on connector type
15 / 26 HD / 3W3	A	47,7	21	33,3	
25 / 44 HD / 5W5	B	61,4	21	47	
37 / 62 HD / 8W8	C	77,8	21	63,5	
50 / 78 HD / AND ALL UPPER MENTIONNED SIZES	D	75,4	23,9	61,1	

Other sizes upon request

Standard cut-out dimensions for ERVAC E to C

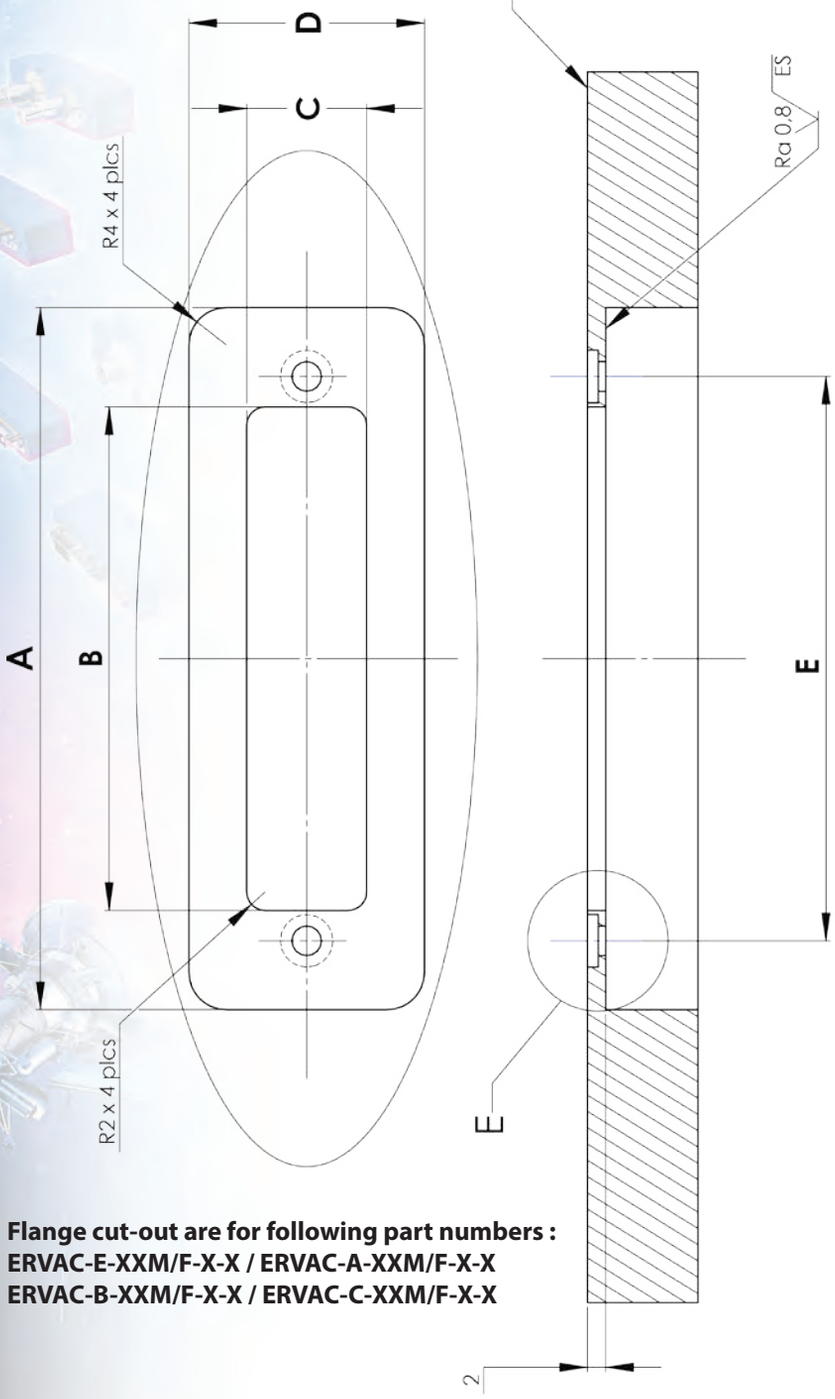

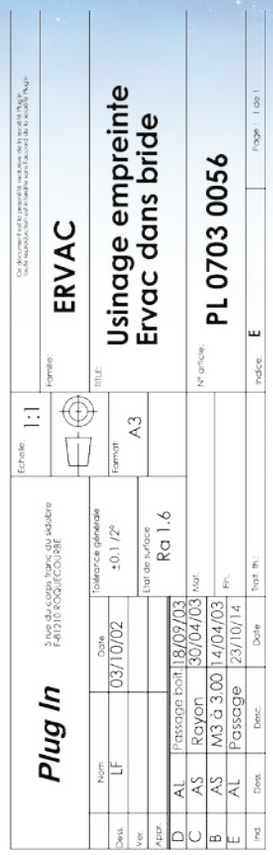

	ERVAC-C	ERVAC-B	ERVAC-A	ERVAC-E
A	79	63	49	41
B	57,5	40,5	27	19
C	11	11	11	11
D	22	22	22	22
E	63,5	47	33,3	25
	37/62HD/8W8	**25/44HD/5W5**	**15/26HD/3W3**	**09/15HD/2W2**

Flange cut-out are for following part numbers :
ERVAC-E-XXM/F-X-X / ERVAC-A-XXM/F-X-X
ERVAC-B-XXM/F-X-X / ERVAC-C-XXM/F-X-X

Standard cut-out dimensions for ERVAC D cut-out

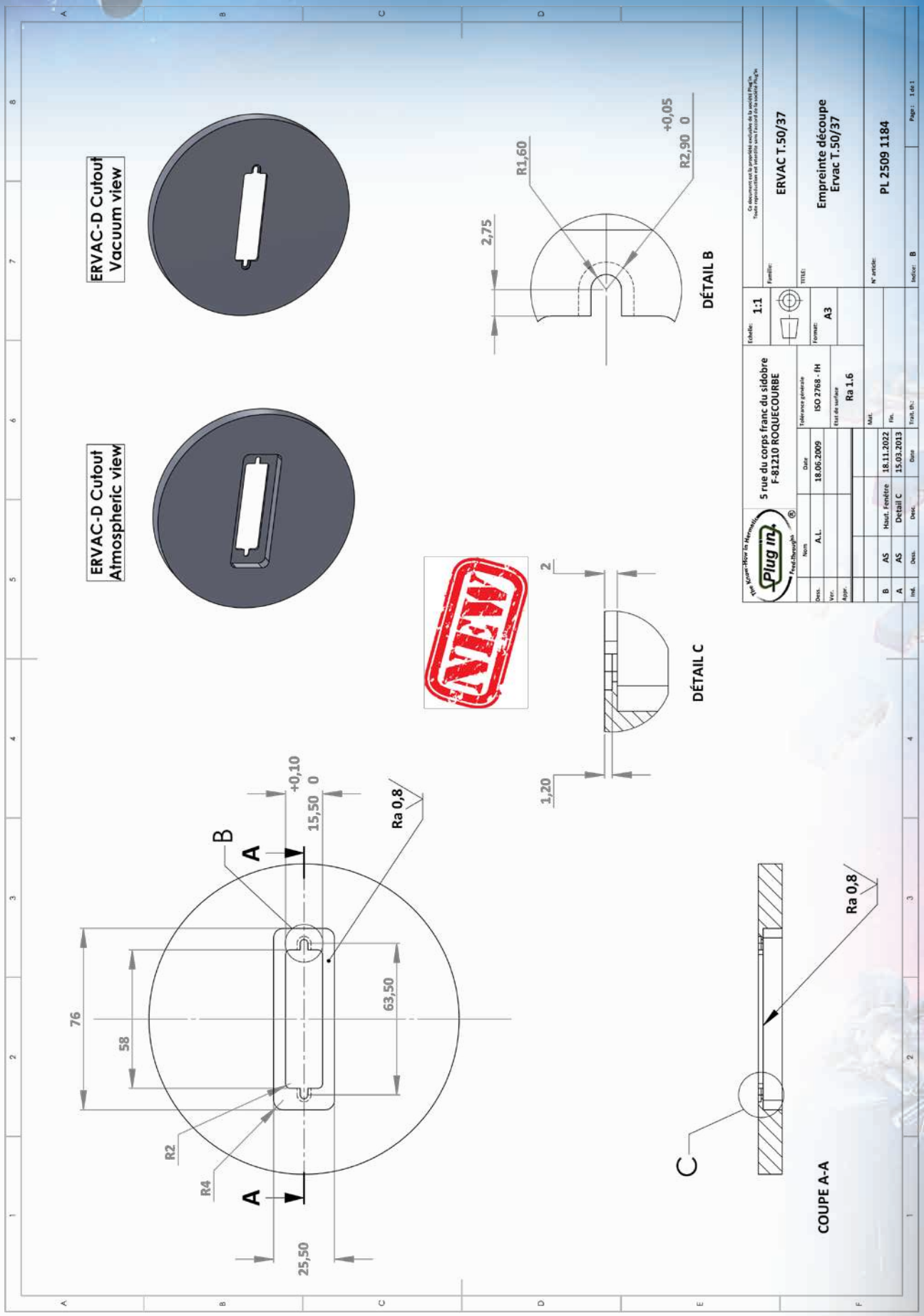

Dimensions valid for all ERVAC D types

ERVAC General informations

Services and support

Although our standard assortment is broad and miscellaneous, there are customer requirements which need an individual and specific design. Thanks to capabilities and years of experience, Plug In Is the ideal partner when customized solutions are demanded.

3D files

For the exchange of CAD models between various CAD systems, Plug in is providing the customers with 3D files in IGS or STEP data format.

Material comparison and outgassing rates

Approximate outgassing rates to use for choosing vacuum materials or calculating gas loads *(All rates are for 1 hour of pumping)*	
Vacuum material	**Outgassing rate** *(torr liter/sec/cm²)*
Stainless stell	7,E-09
Aluminum	6,E-09
Mild steel	4,E-06
Brass	5,E-06
High density ceramic	3,E-09
Pyrex	8,E-09
Vacuum material	**Outgassing rate** *(torr liter/sec/linear cm)*
Viton (unbaked)	8,E-07
Viton (baked)	4,E-08

Standard flange configurations for ERVAC D type			
Flange size	**Air side**	**Vacuum side**	**Cutout number**
DN100			**2**
DN160		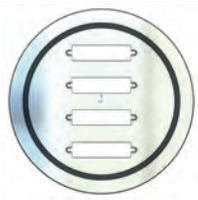	**4**
DN200		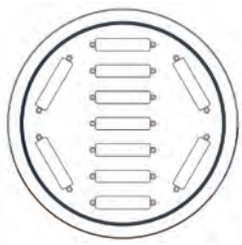	**11**
DN250			**16**
DN320		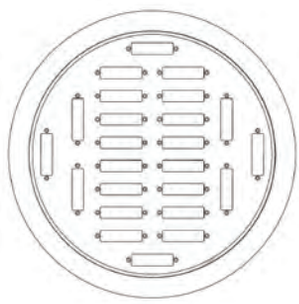	**24**

ERVAC D-SUB Normal density signals and thermocouples - Technical data

Technical Data

Mechanical Data

Mating force per signal contact :	3,4 N
Unmating force per signal contact :	0,2 N

Electrical Data

Current rating at room temperature :	5 A
Test voltage between 2 contacts / shell and contact :	1200 V / 1 min.

Meets transition resistance requirements per contact pair in line with DIN 41652

Contacts :	5 mΩ
Insulation resistance between contacts :	5000 MΩ
Volume resistivity :	1016 Ω cm
Dielectric strength :	50 kV / mm

Materials and Platings

Shell (upon request) :	Steel (brass)
Shell plating (upon request) :	Yellow chromate over zinc plating (hard gold)
Contact material :	Signal : copper alloy 1,3 µm gold plated Tc K type : NiCr / NiAl Tc T type : Cu / CuNi Tc E type : NiCr / CuNi Tc J type : Fe / CuNi Tc N type : NiCrSi / NiSi

All D-sub components fully meet the requirements of : MIL-PRF-24308 - M24308/11-1 M24308/10-1- M39029/64-369 M39029/63-368

Mating Side Plug Connector

E	**9**	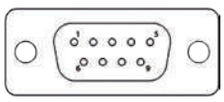
A	**15**	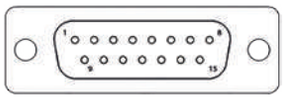
B	**25**	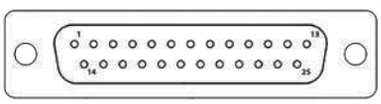
C	**37**	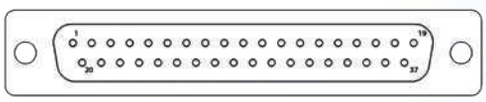
D	**50**	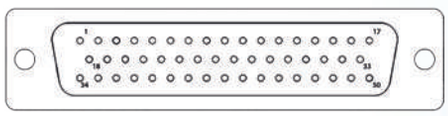

ERVAC D-SUB Normal density signals and thermocouples - Technical data

MODULE TYPES

ERVAC-E-9M/F-I-ND

ERVAC-A-15M/F-I-ND

ERVAC-B-25M/F-I-ND

ERVAC-D-2x9M/F-I-ND

ERVAC-D-15M/F-I-ND

ERVAC-D-25M/F-I-ND

ERVAC-D-37M/F-I-ND

ERVAC-D-50M/F-I-ND

Mating connector Kits are available if needed - For details refer to page 14

ERVAC D-SUB Normal density Thermocouple Crimp Contacts

Our screw machined thermocouple contacts are made by the highest skilled swiss screw machine workshops out of the highest selected solid materials. All our screw machined socket contacts have a stainless steel sleeve for an improved reliability.

D-Subminiature contacts are manufactured according to military specification : MIL-DTL-39029

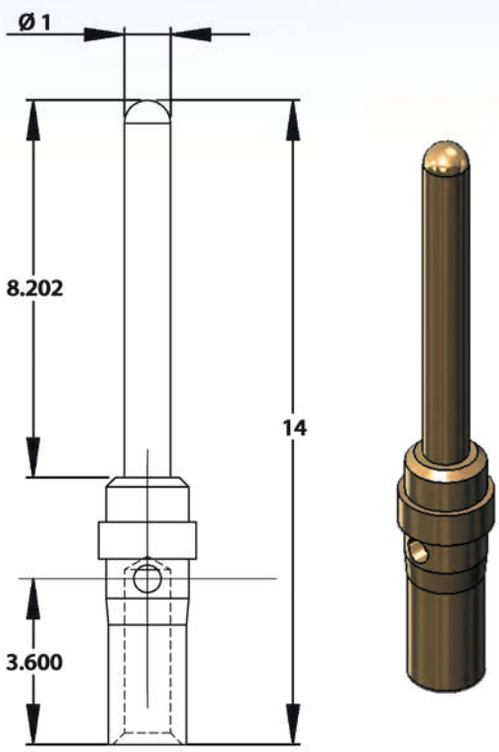

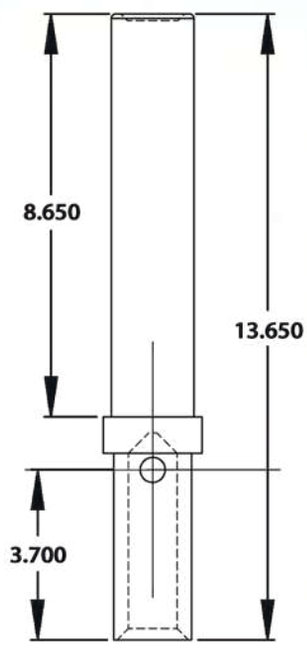

B1423	20	CH	M
Contact series prefix Solid machined male contact = B1423 Solid machined female contact = B2973			
Contact sizes For wire sizes AWG (mm²) 20/22/24 (0,5/0,3/0,25) = 20 For wire sizes AWG (mm²) 26/28/30 (0,12/0,08/0,05) = 26			
Contact material Alumel = AL Chromel = CH Constantan = CO Copper = CU Iron = FE Nicrosil = NP Nisil = NN			
Contact gender Male = M Female = F			

Thermocouple types :

Type K : Chromel (+) - Alumel (-)
Type T : Copper (+) - Constantan (-)
Type E : Chromel (+) - Constantan (-)
Type N : Nicrosil (+) - Nisil (-)
Type J : Iron (+) - Constantan (-)

Connectors mating Kit and accessories
Signal and Thermocouple

Plug In is offering a complete range of D-Subminature connectors for test and ground applications. They are available as a standard with zinc plated steel shells or, upon request, with hard gold plated brass shells (non magnetic applications).

All our D-SUB connectors are fully compatible and mateable with all D-SUB connectors conforming to :

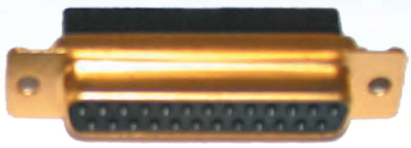

- ESA/SCC 3401 - GSFC 311-P4
- MIL-DTL-24308 - IEC 807-2

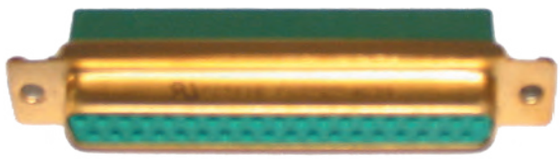

These connectors are suitable for vacuum applications down to 1.10-7 mbar end pressure.

Each connector kit includes :

- 1 male connector + 1 metal hood
- 1 female connector + 1 metal hood
- Male and female crimp contacts

Connector kits are delivered on demand and available for all D-SUB type including standard density (thermocouple and signal), high density (signal) and mixed layouts (power, coaxial, high voltage).

In addition to his full line of hermetically sealed feedthroughs, Plug In also offers an «all in one» solution with fully assembled electrical or thermocouple harnesses to be used under atmospherical or vacuum pressure conditions.

Metal hoods with straight cable outlet

Angled cable outlet hoods are available upon request

Plug In - know how
Engineering

The word quality comes from Latin and literally means "What state". The notion of quality is by definition subjective as it may be poor or good. If we stick to the common definition, the quality would come from a set of decision and action to satisfy a customer by providing products or services that meet his expectations.

At Plug In, we prefer by far the notion of artisanal identity of our products. Indeed, this approach integrates the concept of Art, a word which, derived from the Latin "Artis" means, among other meaning, skill, mastery of the trade and technical knowledge, so many values that should allow us to go beyond expectations of our customers. This is the foundation of our production process. This is what led us to search for reliable partners, recognized experts in their respective fields. This imposes above all an uncompromising rigor throughout the manufacturing process, the final sanction being the perfect validity of the product or its destruction.

Since the very first days Plug In has always used one of the best 3D CAD software available on the market, called SOLIDWORKS. Our Engineering team is working with the latest high speed work stations, replaced every 3 years so we are, every day, using the best up-to-date design tool. It offers a fast exchange of datas and drawings with our customers and gives them the real aspect of their future products.

Our manufacturing drawings to manufacture our spare components are directly released to our sub contracting partners, most of them local companies located in the Aerospace Valley around Toulouse in the South of France. That concept insure a fast and reliable programming of their numerical controlled machines as well as the very best accuracy.

Thanks to our small size, all our multi-skilled staff (design, sales, production, purchasing) is working closely to insure the best answer to your specific needs, even the most complex one and even for one single item.

We have an overall cumulated experience of more than 60 years in the design and manufacturing of connectors and feedthroughs so we are used to be challenged by our customers. Do not hesitate to do so.

Impossible is often made possible by the Plug In team !

ERVAC D-SUB high density
Technical data

Technical Data

Mechanical Data

Mating force per signal contact :	3,4 N
Unmating force per signal contact :	0.2 N

Electrical Data

Current rating at room temperature :	3 A
Test voltage between 2 contacts / shell and contact :	1000 V / 1 min.

Meets transition resistance requirements per contact pair in line with DIN 41652

Contacts :	7,5 mΩ
Insulation resistance :	5000 MΩ
Volume resistivity :	1016 Ω cm
Dielectric strength :	50 kV / mm

Materials and platings

Shell (standard) :	Steel
Shell plating (standard) :	Yellow chromate over zinc plating
Contact material :	Copper alloy 1,3 µm gold plated

All D-sub components fully meet the requirements of :	MIL-PRF-24308 / M24308/13-1 M24308/12-1 / M39029/58-360 M39029/57-354

Mating Side Plug Connector

ERVAC Size	Contact number	Contact arrangment
E	15	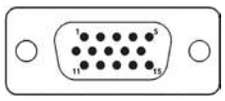
A	26	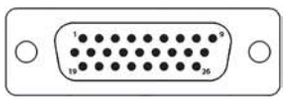
B	44	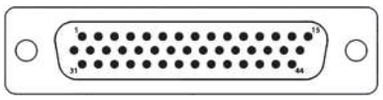
C	62	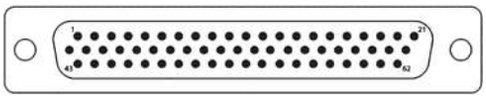
D	78	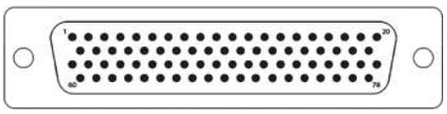

Note : For the D-Sub 104 contacts, please refer to the MODULE-F section

ERVAC D-SUB high density

MODULES TYPES

ERVAC-E-15M/F-I-HD

ERVAC-A-26M/F-I-HD

ERVAC-B-44M/F-I-HD

ERVAC-D-215M/F-I-HD

ERVAC-D-26M/F-I-HD

ERVAC-D-44M/F-I-HD

ERVAC-D-62M/F-I-HD

ERVAC-D-78M/F-I-HD

Mating connector Kits are available if needed - For details refer to page 14

ERVAC D-SUB Mixed layout

TECHNICAL DATA

High Power D-Sub Size 8 contact

Mechanical Data

Mating force per signal contact	< 7 N
Unmating force per signal contact	~ 5 N
Mating cycles	> 500

Electrical Data

Current rating at room temperature	40 A
Contact resistance	< 1 m Ω

High Voltage D-Sub Size 8 contact

Mechanical Data

Mating force per signal contact	< 5 N
Unmating force per signal contact	~ 2,5 N
Mating cycles	> 500

Electrical Data

Current rating (DC) at room temperature	2 A
Contact resistance	< 3 m Ω
Maximum operating voltage	3 kV
Proof Voltage	4 kV / 50 H z

Coaxial D-Sub Size 8 contact

Mechanical Data

Mating force per signal contact	< 7 N
Unmating force per signal contact	< 7 N
Mating cycles	> 500

Electrical Data

Characteristic impedance	50 or 75 Ω
Current rating (DC) at room temperature	2 A
Inner and outer contact resistance	< 3 m Ω
Maximum operating voltage	3 kV
Proof Voltage	750 V / 50 H z
Maximum frequency	1,5 GHz
Test Voltage between 2 contacts / shell and contact	1000 V / 1 min .

Meets transition resistance requirements per contact pair in line with DIN 41652 :

Insulation resistance	5000 M Ω
Volume resistivity	1016 Ω cm
Dielectric strength	50 kV / m m
Materials and Platings	
Shell (standard)	Steel
Shell plating (standard)	Yellow chromate over zinc plating
Contact material	Copper alloy - 1,3 µm gold plated
All D-sub components fully meet the requirements of	MIL-C-24308
	M24308/13-1 / M24308/12-1
	M39029/58-360 / M39029/57-354

ERVAC D-SUB Mixed layout
Technical data

LAYOUT VARIATIONS

E	 F1W1	 FM5W1	 F2W2	 F2W2...C
A	 FM3W3	 F3W3...C	 FM7W2	
	 FM11W1			
B	 FM5W5	 FM9W4	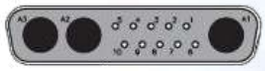 FM13W3	
	 FM17W2	 FM21W1		
C	 FM8W8	 FM13W6	 FM17W5	
	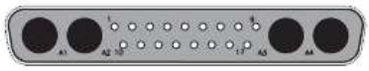 FM21WA4	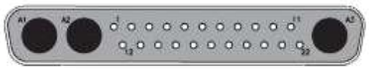 FM25W3	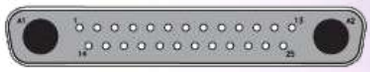 FM27W2	
	 F7W7			
D	 FM24W7	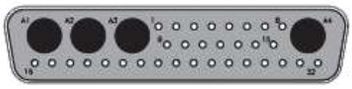 FM36W4	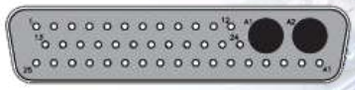 FM43W2	
	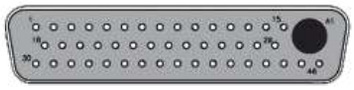 FM47W1			

ERVAC D-SUB Mixed layout
Module examples

MODULE TYPES

ERVAC-E-2W2CM/F-I-P

ERVAC-A-3W3M/F-I-P

ERVAC-B-5W5M/F-I-C

ERVAC-D-8W8M/F-I-HV

ERVAC-D-27W2M/F-I-C

Mating connector Kits are available if needed - For details refer to page 14

ERVAC D-SUB Mixed layout

MANUFACTURING EXAMPLES

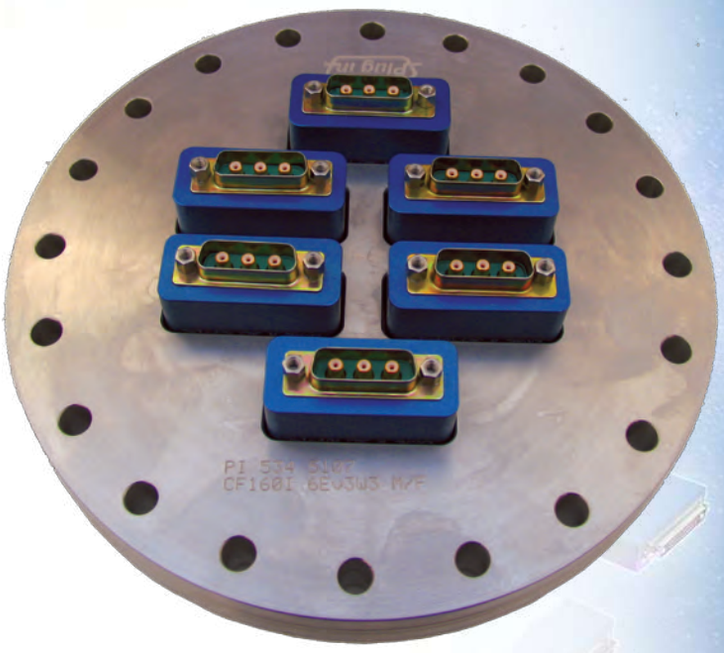

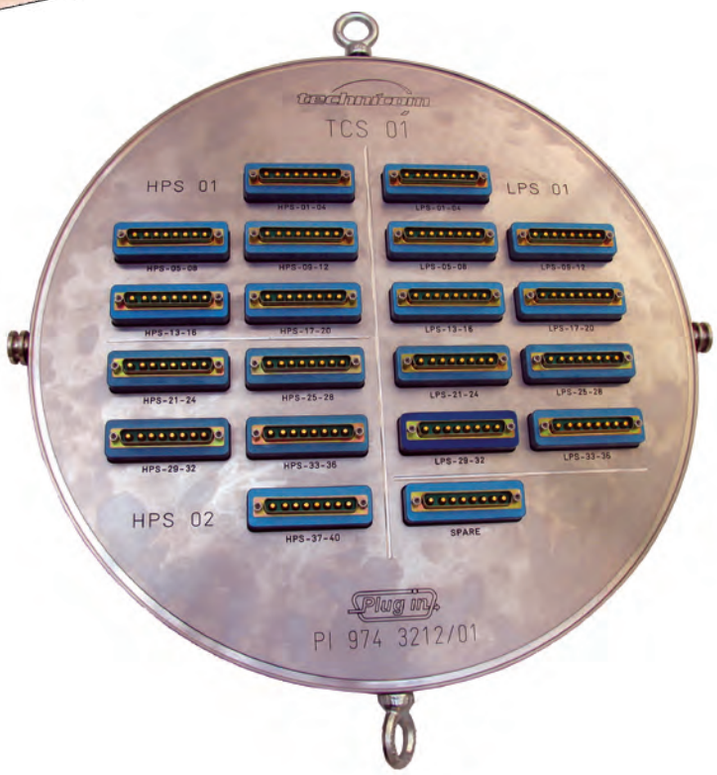

ERVAC Ordering informations

ERVAC	D	50	M/F	I	ND

Series prefix ERVAC

Module sizes E / A / B / C / D

Contact arrangement
Normal density : 9, 15, 25, 37, 50 and 2 x 9
High density : 15, 26, 44, 62, 78 and 2 x 15

Power, high voltage or coxial
1W1, 5W1, 2W2, 2W2C, 3W3, 3W3C, 7W2, 11W1, 5W5
5W5, 9W4, 13W3, 17W2, 21W1, 8W8, 13W6, 17W5
21WA4, 25W3, 27W2, 7W7, 24W7, 36W4, 43W2, 47W1

Connector gender
M/F, M/M*, F/F*

Shell type
I = Zinc plated steel or wire to wire
IS = male zinc / female gold plated
SI = male gold / female zinc plated
S = Gold plated brass

Contact type
C = Coxial D-SUB size 8
HD = High density contact size 22
HV = High voltage contact size 8
ND = Normal density contact size 20
P = Power contact size 8

Thermocouple, only normal density size 20 machined contact
TE01 or TE02** = Chromel / Constantan
TJ01 or TJ02** = Iron / Constantan
TK01 or TK02** = Chromel / Alumel
TN01 or TN02** = Nicrosil / Nisil
TT01 or TT02** = Copper / Constantan

* Option not available for high density contact size 22 and for mixed layout D-SUB, except 3W3, 5W5 and 8W8
** TT01 = thermocouples in line - TT02 = pairs

Thermocouple mounting examples

(D-Sub 37 contact - Face view of female - Rear view of male)

Contact n°19 - Standard gold plated shield contact

Contact n° 1 to 18
Positive pole (+)
Copper

Contact n° 20 to 37
Negative pole (-)
Constantan

TT01

19 1

37 20

Even n° contacts
Positive pole (+)
Copper

Odd n° contacts
Negative pole (-)
Constantan

TT02

19 1

37 20

Hyperfrequencies

According to the most commonly accepted definition*, the microwave represents electromagnetic waves whose wavelength are of the order of a centimeter, and which are used in particular in radar technology and in radio transmission. Radar has been a major contributor to microwave development: studies conducted during and after the Second World War at the Massachusetts Institute of Technology led to the development of literature on microwave foundation, technology, and measurement techniques . Subsequently, new areas of use have emerged, for example in terrestrial radio-relay telecommunications, in military countermeasures systems and, of course in Space.

Within these 20 years of existence, Plug In has developed new versions based on the ERVAC® feedthrough design mounted with connector types going from 1,5 GHz (D-Sub Mixed layout) up to 65 GHz (PC 1.85).

*(source: Encyclopaedia Universalis)

Coaxial - general data

The demands placed on space communications systems are continuously increasing while the challenge is to maintain their extreme reliability and versatility, in order to accommodate the long system lifetimes of all missions. If it is a sector in space technologies that is developing extremely rapidly, it is certainly this one. In the same way as for our entire range, Plug In offers you the widest choice of hermetic feed-throughs covering the frequency ranges currently used in missions and which have to undergo long time thermalvacuum tests.

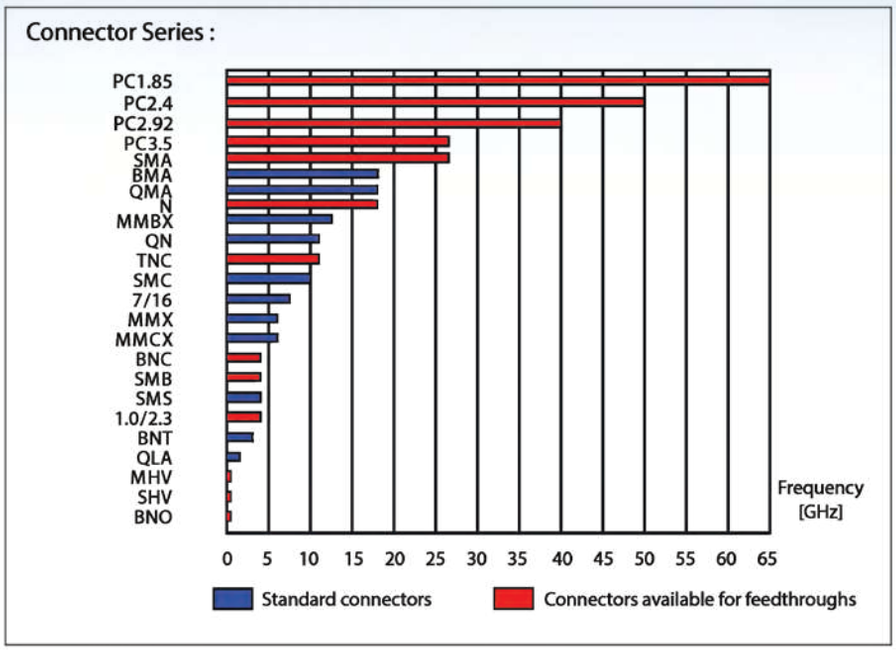

In the following pages you will find a detailed description of each type of hermetic feed-through according to the frequency and wavelength range used by your system. The table below shows you the bands, depending on the different technical applications.

Designation	Frequency range	Wavelength range	Typical uses	
L band	1 to 2 GHz	15 cm to 30 cm	Military telemetry, GPS, mobile phones (GSM), amateur radio	Plug In Products
S band	2 to 4 GHz	7.5 cm to 15 cm	Weather radar, surface ship radar, and some communications satellites (microwave ovens, microwave devices/communications, radio astronomy, mobile phones, wireless LAN, Bluetooth, ZigBee, GPS, amateur radio)	Plug In Products
C band	4 to 8 GHz	3.75 cm to 7.5 cm	Long-distance radio telecommunications	Plug In Products
X band	8 to 12 GHz	25 mm to 37.5 mm	Satellite communications, radar, terrestrial broadband, space communications, amateur radio, molecular rotational spectroscopy	Plug In Products
Ku band	12 to 18 GHz	16.7 mm to 25 mm	Satellite communications, molecular rotational spectroscopy	Plug In Products
K band	18 to 26.5 GHz	11.3 mm to 16.7 mm	Radar, satellite communications, astronomical observations, automotive radar, molecular rotational spectroscopy	Plug In Products
Ka band	26.5 to 40 GHz	5.0 mm to 11.3 mm	Satellite communications, molecular rotational spectroscopy	Plug In Products
Q band	33 to 50 GHz	6.0 mm to 9.0 mm	Satellite communications, terrestrial microwave communications, radio astronomy, automotive radar, molecular rotational spectroscopy	Plug In Products
V band	50 to 75 GHz	4.0 mm to 6.0 mm	Millimeter wave radar research, molecular rotational spectroscopy and other kinds of scientific research	Plug In Products
W band	75 to 110 GHz	2.7 mm to 4.0 mm	Satellite communications, millimeter-wave radar research, military radar targeting and tracking applications, and some non-military applications, automotive radar	Not applicable
F band	90 to 140 GHz	2.1 mm to 3.3 mm	SHF transmissions: Radio astronomy, microwave devices/communications, wireless LAN, most modern radars, communications satellites, satellite television broadcasting, DBS, amateur radio	Not applicable
D band	110 to 170 GHz	1.8 mm to 2.7 mm	EHF transmissions: Radio astronomy, high-frequency microwave radio relay, microwave remote sensing, amateur radio, directed-energy weapon, millimeter wave scanner	Not applicable

ERVAC Coaxial - general data

Plating materials

Properties	Gold	Silver	Nickel	SUCOPLATE®
Density (g/cm^3 / lb/in^3)	18,0*	10,5	8,9	8,2
Melting at temperature °C / °F	1063	960	1453*	na
Electrical resistivity ϱ20 (Ω mm^2/m)	0,022	0,015	0,09	na
Thermal conductivity (W/mK)	310	410	60	na
Tensile strength at 20°C (N/mm^2 / 10^{3}lb/in^2)	120	140	320	na
Elasticity mode (N/mm^2 / 10^{6}lb/in^2)	77 000	76 000	200 000	na
Corrosion resistance **	++	+	+	++
Machinability **	++	++	na	na
Chemical resistance **	+	+	+	++

Base materials

Properties	Beryllium Copper (CuBe)	Bronze	Brass (CuZn39Pb3)	Stainless steel (303/1.4305)	Anticorodal (AlMgSi1)
Density (g/cm^3 / lb/in^3)	8,25	8,8	8,5	7,9	2,75
Melting at temperature °C / °F	865-980*	930-1060*	870-890	1420*	580-650
Electrical conductivity (%IACS 20°C / 68°F)	12*	11,5*	16	na	na
Electrical resistivity ϱ20 (Ω mm^2/m)	0,083	0,087	na	0,73	0,039
Thermal conductivity (W/mK)	na 115	na 80-85	na 120	15	170
Tensile strength at 20°C (N/mm^2 / 10^{3}lbf/in^2)	1270-1500*	350-820	380-590	500-750	310-370
Modulus of elasticity (N/mm^2 / 10^{6}lbf/in^2)	130 000	118 000	96 000	200 000	70 000
Corrosion resistance **	+water, salt water	+water, salt water	0	+	++
Chemical resistance **	+oil; 0 acids base; -ammoniums	-to with acids bases & ammoniums	+	0	++
Machinability **	+	na	++	+	++

Insulation materials

Properties	PE (PE-HD)	PTFE	PFA	FEP	PEEK	PPO
Density (g/cm^3 / lb/in^3)	0,94	2,16 *	2,15	2,16 *	1,3	1,06
Temperature range °C / °F	-50 - +70	-200 - +260	-200 - +260	-100 - +200	-70 - +250	-30 - +140
Melting at temperature °C / °F	130	327	305	225	334	230
Dielectric constant at 1 MHz	2,3	2,1	2,1	2,1	3,3	2,7
Electrical resistivity (Ω mm^2/m)	> 1 x 10^{17}	> 1 x 10^{18}	> 1 x 10^{17}	> 1 x 10^{18}	> 1 x 10^{16}	> 1 x 10^{17}
Tensile strength at 20°C (N/mm^2 / 10^{3}lb/in^2)	27	27	26	20	92,0	60,0 *
Modulus of elasticity (N/mm^2 / 10^{6}lbf/in^2)	790 - 1000	460	na	350	3900	2500
Water resistance (at 23°C / 73°F)	++	++	+	++	-	+
Flammability **	HB-V-O	V-O	V-O	V-O	V-O	na
Chemical resistance **	+	++	++	++	++	na

* Owing to differences in purity in the case of elements and of composition in metals, the values can be considered only as approximations

** The abilities of the materials (to be treated, shaped, etc.) are rated from ++ (excellent), + (good), 0 (fair), - (poor) to - - (very poor) compared with each other

Information source : HUBER+SUHNER RF Connector guide

ERVAC PC 1.85 - 65 GHz
Technical data

Technical data

PC 1.85 are precision models for use in microwave applications up to 65 GHz. These items features best electrical performances, excellent mechanical stability as well as extreme reliability. They are particularly well suited for semi-rigid microwave cables.

Four DC-65 GHz - 1.85 mm Male / Male plug in one standard ERVAC® module gives you the highest frequency actually available on an hermetic feedthrough.

Connectors

Electrical :

Frequency range DC - 65 GHz
Return Loss > 15 dB

Mechanical :

Body and outer conductors :
- Passivated stainless steel
Inner conductors :
- Gold plated Berryllium copper and Brass

Glass Bead

Electrical :

Frequency range DC - 65 GHz

Mechanical :

Outer and inner conductors :
- Gold plated Fe / Ni / Co alloy (KOVAR)
Insulator : #7070 Glass

Coupling Torque : 90 N-cm (Nominal)

Mating cycles : > 1000

Electrical data	Requirements
Impedance	50 Ω
Frequency range	DC … 65 GHz
Dielectric withstanding voltage (at sea level)	500 V rms, 50 Hz
Working voltage (at sea level)	150 V rms, 50 Hz
insulation resistance	$\geq 5.10^3$ MΩ
Contact resistance	
- centre contact	≤ 4 mΩ
- outer contact	< 2,5 mΩ

Typical Performance

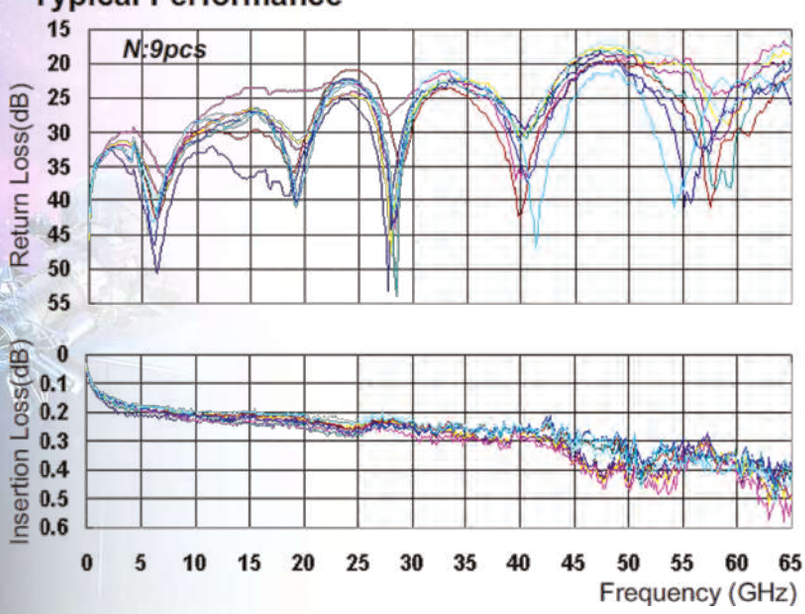

Test configuration

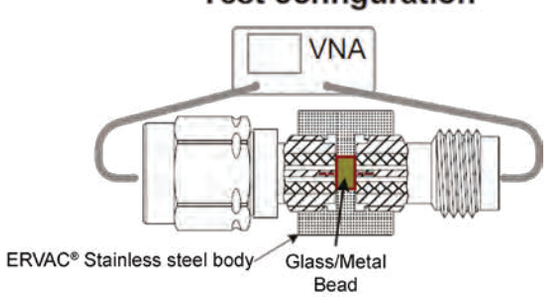

ERVAC PC 2.4 - 50 GHz
Technical data

Technical data

The 2.4 mm connector was developed by HP, Amphenol, and M/A-COM for use to 50 GHz. This design eliminates the fragility of the SMA and 2.92 mm connectors by increasing the outer wall thickness and strengthening the female fingers. It can mate with SMA, 3.5 mm and 2.92 mm with the use of precision adapters.

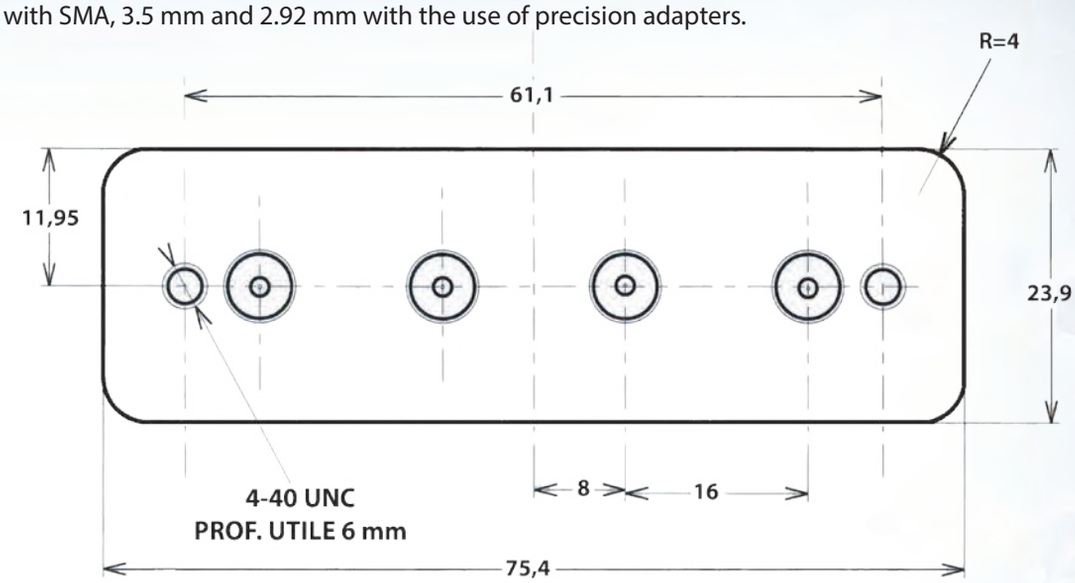

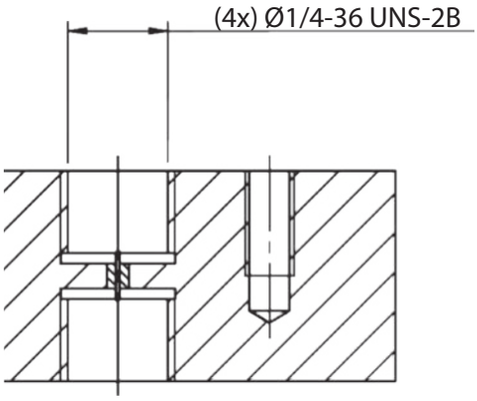

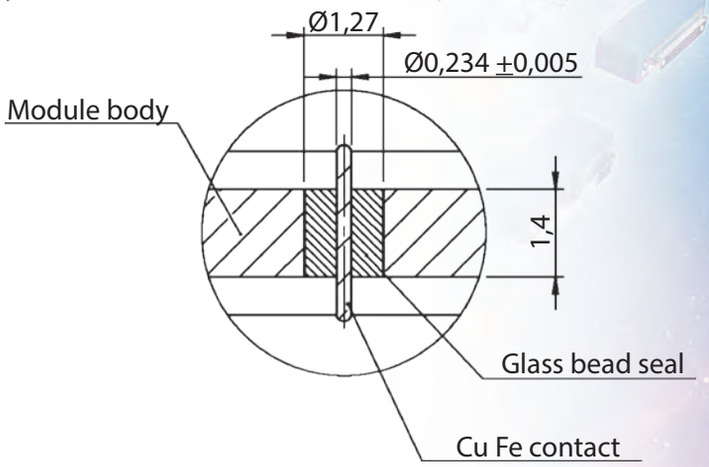

Electrical	
Frequency	DC~ 50 GHz
Impedance	50 Ω
VSWR	1.3 : 1 to 50 GHz
Insulation Resistance	5000 MΩ
Dielectric WithstandVoltage	1200 VrmsMax
Contact Resistance	
Outer Conductor	2mm Ωmax
Inner Conductor	3mm Ωmax
InsertionLoss	0.35 dB max (@50 GHz)
RF Leakage	-90 dB
Power Handling	70W (@2 GHz)

Mechanical	
Mating Cycle(Durability)	500
Recommended Mating Torque	0.9 ~ 1.13 Nm / 8 ~10 lbs
Proof Torque	1.7 Nm / 15 lbs
CouplingNut Retention Force	270 N / 27.7 kfg/ 61 lbs
CenterContact Retention Force	4 pound (axial)

Environmental	
Temperature	-40°Cto + 125°C
Thermal Shock	MIL-STD-202, Method 107, Condition B
Moisture Resistance	MIL-STD-202, Method 106

ERVAC PC 2.92 - 40 GHz
Technical data

Technical data

PC 2.92 are precision models for microwave applications up to 40 GHz. They are intermateable with series SMA and PC 3.5. they have a high mechanical stability and an excellent repeatability

	Jack	
	min.	**max.**
A	4,60/,181	4,64/,183
B		0,13/,005
C	2,80/,110	
D	2,89/,114	2,95/,116
E	1,88/,074	1,98/,078
F	5,90/,232	
G	4,40/,173	
H	0,70/,028	0,90/,036
I	5,30/,208	5,40/,213

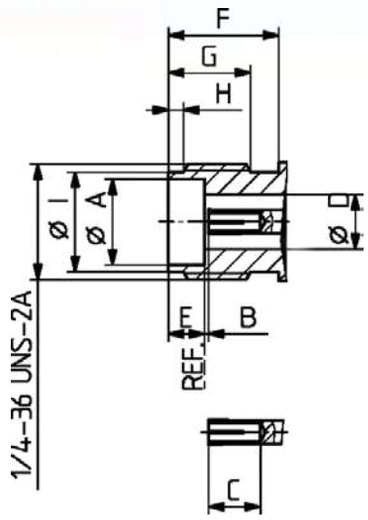

Electrical data	**Requirements**
Impedance	50 Ω
Frequency range	DC ... 40 GHz
Dielectric withstanding voltage (at sea level)	750 V rms, 50 Hz (depending on cable)
Working voltage (at sea level)	≤ 250 V rms, 50 Hz
insulation resistance	≥ 5.10^3 MΩ
Contact resistance - centre contact - outer contact	 ≤ 3 mΩ < 2 mΩ
VSWR (typical values) - cable connectors (cable assembly with 2 connectors) - launchers	 ≤ 1,37 DC ... 40 GHz ≤ 1,43 DC ... 40 GHz

Mechanical data	**Requirements**
Coupling nut torque - recommended - proof torque	 1,30 Nm / 11,47 in. lbs 1,70 Nm / 15,0 in. lbs
Contact captivation	≥ 27 N / 4,9 lbs
Durability (matings)	≥ 500

Material data		
Connector parts	**Material**	**Plating**
Bodies, cable connectors	copper beryllium alloy / stainless steel	gold / passivated
Bodies receptacles	stainless steel / copper alloy	passivated / gold
Center contact	copper beryllium alloy	gold
Support beads	PPO (polyphenylene oxide	

ERVAC SMA - 18 GHz
Technical data

Technical data

SMA are precision models for microwave applications up to 18 GHz. . There is a huge variety of applications for SMA types, as in telecom, test and measurement, instruments, avionics, etc.

- Frequency range up to 18 GHz, extended frequency version up to 26.5 GHz
- Excellent return loss
- Intermateable with PC3.5 and PC2.92
- The SMA (Subminiature A) interface dimensions conform to the following standards:

International:	IEC 60169-15
Europe:	CECC 22110
USA:	MIL-C-39012 SMA - Interface MIL-STD 348a/310

Interface dimesions (mm/inches)

Plug (male)

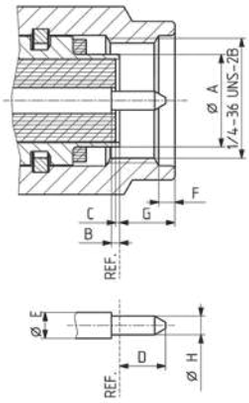

Jack (female)

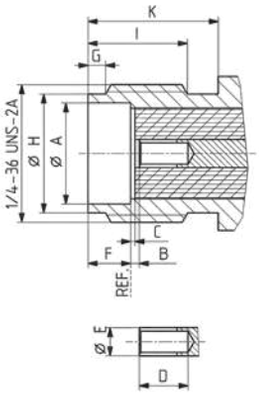

	Plug		Jack	
	min.	max.	min.	max.
A	-	4,59/1,81	4,60/,181	-
B	0,00/,000	0,25/,010	0,00/,000	0,25/,010
C	0,00/,001	0,25/,010	0,00/,001	0,25/,010
D	-	2,54/,100	2,67/,105	-
E	1,24/,049	1,29/,051	1,24/,049	1,29/,051
F	0,38/,015	1,14/,045	1,88/,074	1,98/,079
G	-	3,43/,135	0,38/,015	1,14/,045
H	0,90/,036	,94/,037	5,28/,208	5,49/,216
I	-	-	4,32/,170	-
K	-	-	5,54/,218	-

Electrical data	MIL-C-39012				
VSWR		1.03 @ 1GHz to 1.15 maxi @ 18GHz			
Impedance		50 Ω			
Frequency range for interface		DC ... 18 GHz (extended range DC ... 26,5 GHz			
RL (typical value)		for cable connectors refer to table below			
Cable type		semi-rigid		flexibler	
Cable dielectric diameter (mm/in.)		1,5/,066	3/,117	1,5/,066	3/,117
RF-leackage measured at 3 GHz	3,26	≥ 100dB-f (GHz)		≥ 60dB	
Dielectric withstanding voltage (at sea leveln in V rms, 50 Hz	3,17	1000	1500	750	1000
Working voltage (at sea leveln in V rms, 50 Hz		335	500	250	335
Corona extinction voltage (at 21 000 m / 70 000ft, in V rms, 50Hz	3,22	250	375	190	250
Working voltage (at 21 000 m / 70 000ft, in V rms, 50Hz		85	125	65	85
RF withstanding voltage at 5 MHz (V rms)	3,23	670	1000	500	670
insulation resistance	3,11	≥ 5,10^3 MΩ			
Contact resistance - centre contact - outer contact	3,16	≤ 2,5 mΩ < 3 mΩ			

ERVAC Coaxial
Mounting examples

Manufacturing examples

ISO K DN 63 Flange with
1 x ERVAC-A-2SMAF/F-S-C

ISO K DN 250 Flange with
12 x ERVAC-D-4SMAF/F-S-C and
4 x ERVAC-D-78M/F-S-HD

ISO K DN 250 Flange with
3 x ERVAC-D-4SMAF/F-S-C

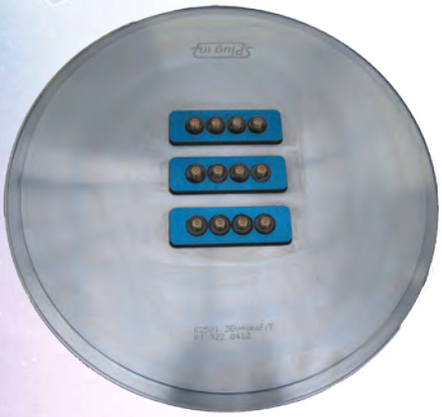

CF DN 100 Flange with
3 x ERVAC-D-3SMAF/F-S-C

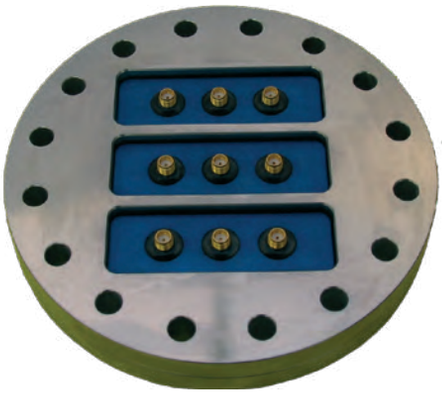

Ordering P/N for all PC x.xx and SMA

ERVACA2SMAF/F-S-C
ERVACA2SMA_2.92
ERVACA2SMA_1.85
ERVACD3SMAF/F-S-C
ERVACD4SMAF/F-S-C
ERVACD4SKF/F-I-C - *(PC2.92 / 40 GHz)*
ERVACD4SMA-F/F-2.4
ERVACD4_SMA_1.85

ERVAC BNC - 4 Ghz
Technical data

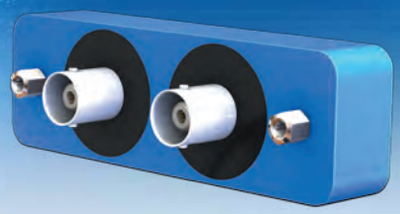

Technical data

BNC remains a popular connector series, featuring a two stud bayonet coupling mechanism, which is particularly useful for frequently coupled and uncoupled RF connections with frequencies up to 4 GHz.

50 Ω BNC connectors and 75 Ω BNC connectors are intermateable without any restrictions.

Interface dimensions conformable to the standards: IEC 61169-8 / Europe: CECC 22120
USA: MIL-C- 39012, BNC Interface MIL-STD-348A/301 / Great Britain: BS 9210 N 004

Interface dimesions (mm/inches)

Plug (male) **Jack (female)**

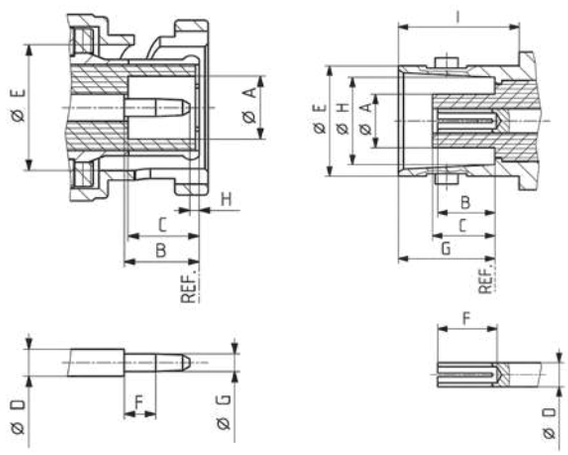

	Plug		Jack	
	min.	max.	min.	max.
A	4,83/,190	--	--	4,72/,186
B	5,33/,210	5,84/,230	4,72/,186	5,23/,206
C	5,28/,208	5,79/,228	4,78/,188	5,28/,208
D	2,06/,081	2,21/,087	2,06/,081	2,21/,087
E	9,78/,385	9,91/,390	9,60/,378	9,70/,382
F	1,98/,078	--	4,95/,195	--
G	1,32/,052	1,37/,054	8,31/,327	8,51/,335
H	0,08/,003	--	8,10/,319	8,15/,321
I	--	--	10,52/,414	--

Electrical data	Requirements
Impedance	50 Ω
Frequency range	DC … 4 GHz
Dielectric withstanding voltage (at sea level)	1,5 kV rms, 50 Hz (depending on cable)
Working voltage (at sea level)	500 V rms, 50 Hz (depending on cable)
insulation resistance	$\geq 5.10^3$ MΩ
Contact resistance - centre contact - outer contact	 ≤ 1,5 mΩ < 1 mΩ
RF-leakage (between 2 - 3 GHz)	≥ 55 dB

Mechanical data	Requirements
Coupling nut torque	7 Ncm … 28 Ncm / 0,6 in. Lbs … 2,5 in. Lbs
Coupling nut retention force	≥ 450N / 101,2 lbs
Contact captivation	≥ 27 N / 6,1 lbs
Durability (matings)	≥ 500

Nota : Upon request, these contacts can be supplied insulated with a PEEK ERVAC body.

ERVAC BNC - 4 GHz
Technical data

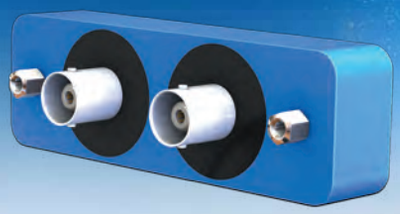

Manufacturing examples

ERVAC-D-2BNCF/F-I-C

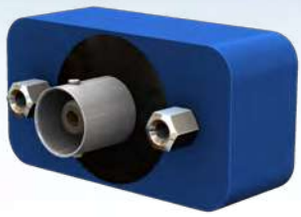

ERVAC-E-1BNCF/F-I-C

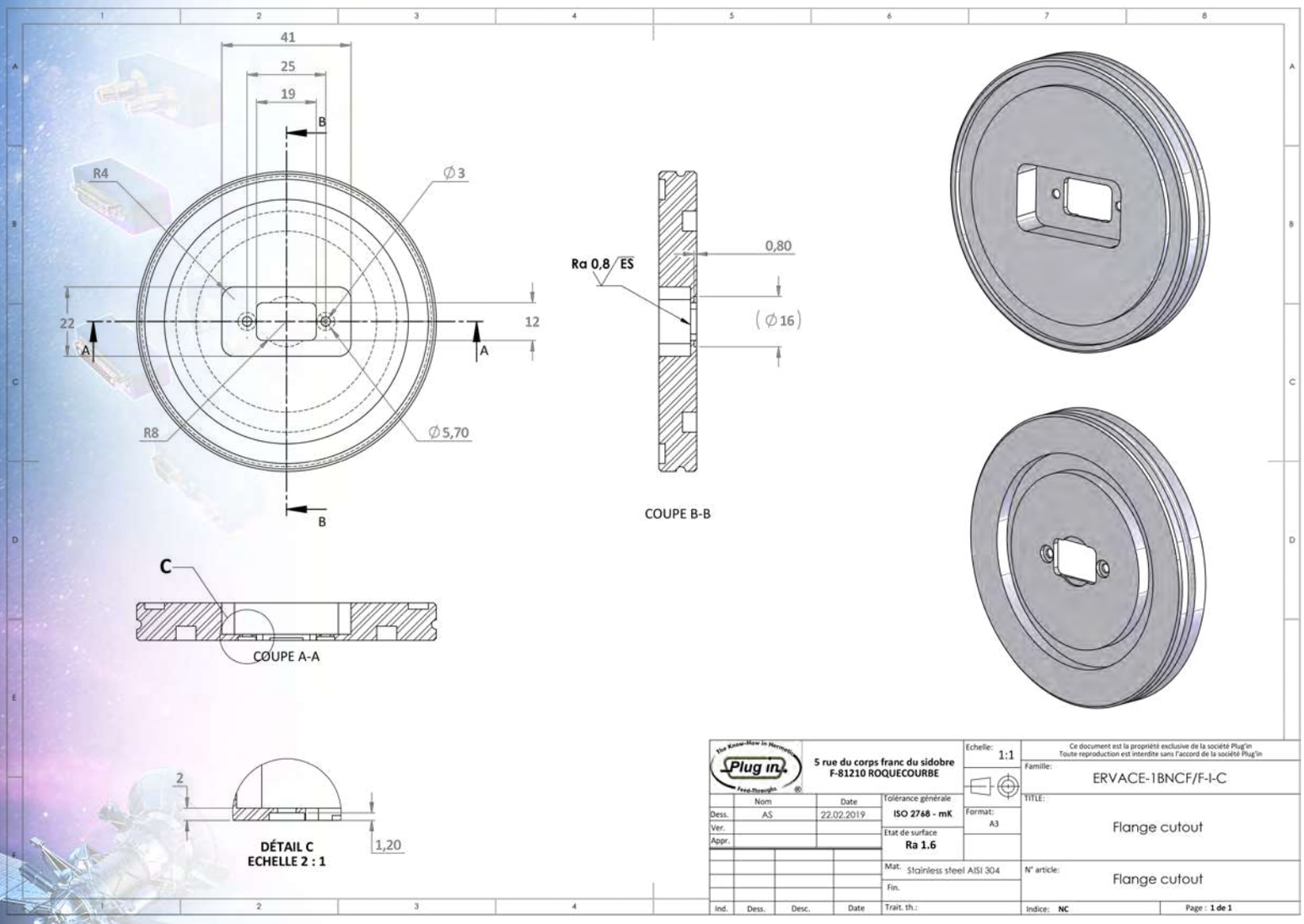

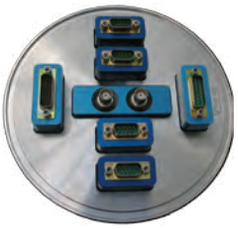

ERVAC SHV - Technical data

Technical data

SHV (Safe High Voltage) connectors provide more secure handling as center contacts are well recessed to prevent shock hazards in unmated condition. All inner contacts are fully captivated and will withstand axial forces of 100 N minimum. When mating a connector pair the outer conductor contact is made prior to the inner conductor contacts. SHV connectors are suitable for all high voltage applications up to 5 kV DC or 3.5 kV rms. These connectors are typically used in nuclear instruments or test and measurement equipment. Voltages are valid for both, the mated and the unmated condition.

Interface dimensions conformable to the standards: IEC 60498, NIM ND-545 / USA: MIL-STD-348A/314 ANSI N 24.4

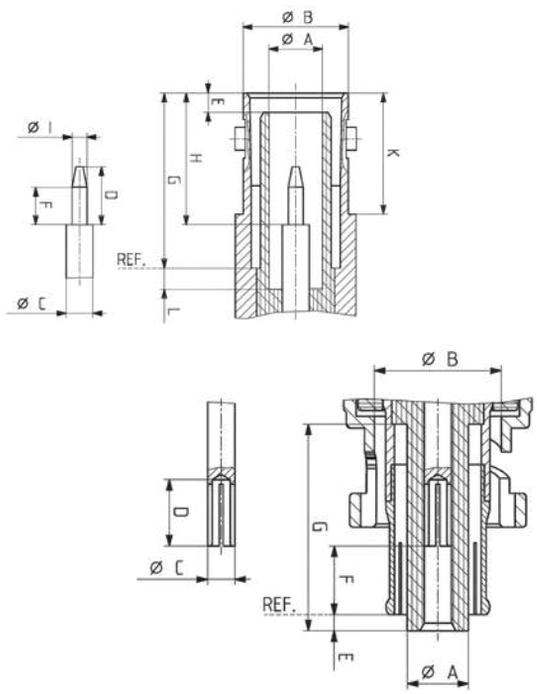

	Plug		Jack	
	min.	max.	min.	max.
A	4,57/,180	4,72/,186	4,83/,190	4,98/,196
B	9,78/,385	9,91/,390	9,60/,378	9,70/,382
C	2,06/,081	--	2,06/,081	--
D	5,44/,214	--	5,26/,207	5,44/,214
E	1,17/,046	1,63/,064	1,55/,061	1,98/,078
F	4,42/,174	--	3,30/,130	--
G	15,90/,626	16,10/,634	15,90/,626	16,00/,630
H	--	--	11,59/,456	12,70/,500
I	--	--	1,32/,052	1,37/,054
K	--	--	10,85/,427	--
L	--	--	1,63/,064	2,18/,086

Electrical data	**Requirements**
Impedance	50 Ω
Frequency range	DC … 300 MHz
Dielectric withstanding voltage (at sea level)	5,0 kV rms, 50 Hz (depending on cable)
Working voltage (at sea level)	≤ 3,5 kV rms, 50 Hz
insulation resistance	≥ 10^6 MΩ
Contact resistance - centre contact - outer contact	 ≤ 2 mΩ < 1,5 mΩ
Corona extinction voltage (at 21 000 m)	≤ 350 V rms, 50 Hz (depending on cable)
Current rating , continuous	≤ 10 A

Mechanical data	**Requirements**
Coupling nut torque	7 Ncm … 28 Ncm / 0,6 in. Lbs … 2,5 in. Lbs
Coupling nut retention force	≥ 450N / 101,2 lbs
Contact captivation	≥ 27 N / 6,1 lbs
Durability (matings)	≥ 500

Nota : An improved insulated PEEK ERVAC body version is available upon request

ERVAC SHV - Mounting examples

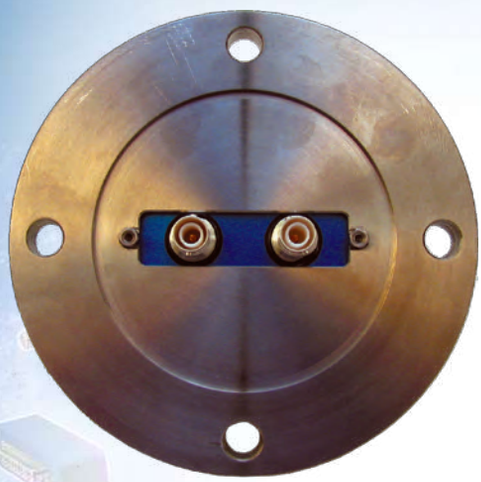

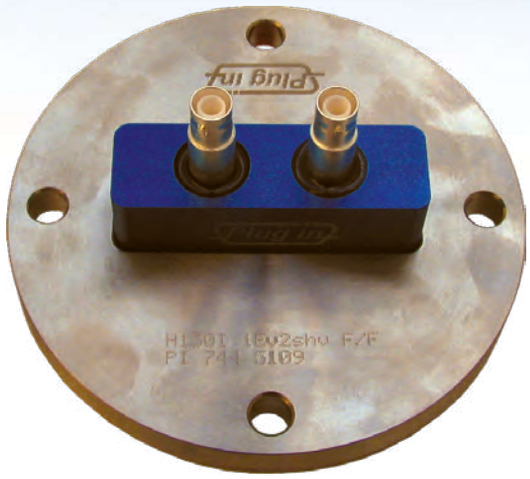

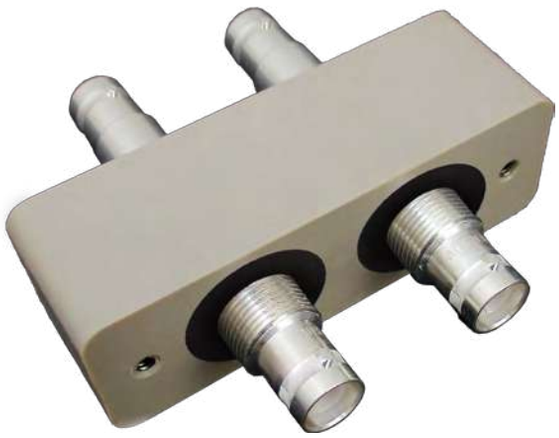

ERVACD2SHVF_F_I_C

Ordering P/N for BNC and SHV

ERVACE1BNCF_F_I_C
ERVACE1BNCF_F_I_CI
ERVACD2BNCF_F_I_C
ERVACD2BNCF_F_I_C
ERVACD2SHVF_F_I_C
ERVACD2SHVF_F_I_CI

NOTE : CI means a ground insulated PEEK version

ERVAC High voltage Reynolds Technical data

Technical Data

The ERVAC high voltage Reynolds 600 Series® is a complete line of subminiature, coaxial, high voltage connector feedthrough. In production since 2001, these high voltage feedthroughs have proven to be extremely reliable in a variety of both, Aerospace/Defense and high-end commercial applications. The 600 Series is also, possibly, the smallest coaxial, high voltage connector rated for use at 70,000 ft. available on the market.

APPLICABLE DOCUMENTS AND SPECIFICATIONS :

Connector	Teledyne Reynolds Series 600
Altitude/Reduced Pressure Rating	70,000 ft.
Voltage Rating	5 kVDC
Current Rating	1 Amp
Test Voltage	7.5 kVDC at 70,000 ft. (simulated) at ambient temperature
Mating Compatibility	Mates all Series 600 plug assemblies
Insulator Material	Plastic
Mating Torque	4 to 6 in-lbs
Mating Style	Threaded
Body Properties	
Body Material	Brass
Body Finish	Gold Plated
Contact Properties	
Contact Material	BeCu
Contact Finish	Gold
Contact Diameter	0.031 in / 0.79 mm
Gasket	Viton

ERVAC High voltage Reynolds
Technical data

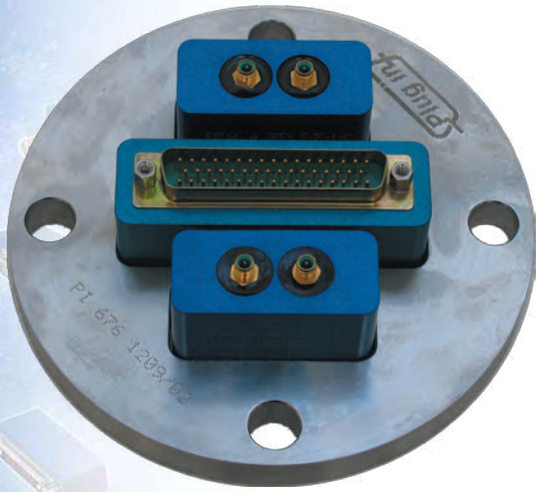

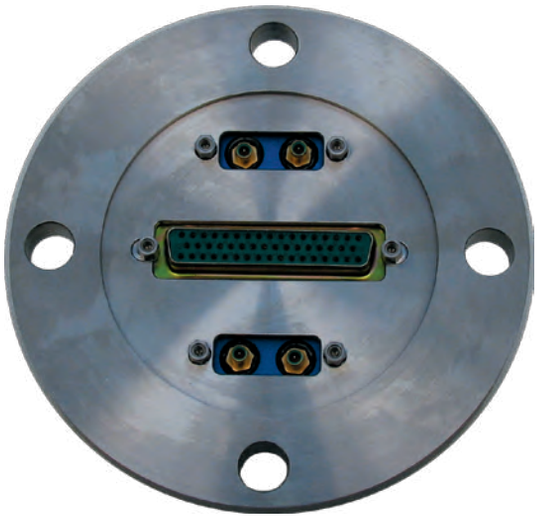

Ordering P/N for HV Reynolds

ERVACA2REYF_F_S_HV
ERVACD4REYF_F_S_HV

ERVAC Micro-D - Technical data

Micro-D connectors have significantly superior performance to commercial type connectors of identical pitch. They are ideal choice when the operating conditions are critical, especially for space applications and thermal vacuum testing. The standardisation has been governed by the MIL-C-83513 issue E standard now dictates the design and performances for these connectors.

The Micro-D connector system meets all requirements in terms of robustness and durability. It has low contact resistance, high current capabilities and dielectric strength while being resistant to shocks and vibrations. With 1.27 mm (0.050") contact spacing, Micro-D connectors, half the size of D-sub connectors, represent an excellent solution for saving both space and weight.

- QPL qualified Micro-D connectors in accordance with MIL-DTL-83513 for military applications.
- Standard range of micro-D connectors according to MIL-DTL-83513.
- Qualified space versions ESCC3401/029 EPPL2 (MDSA references).

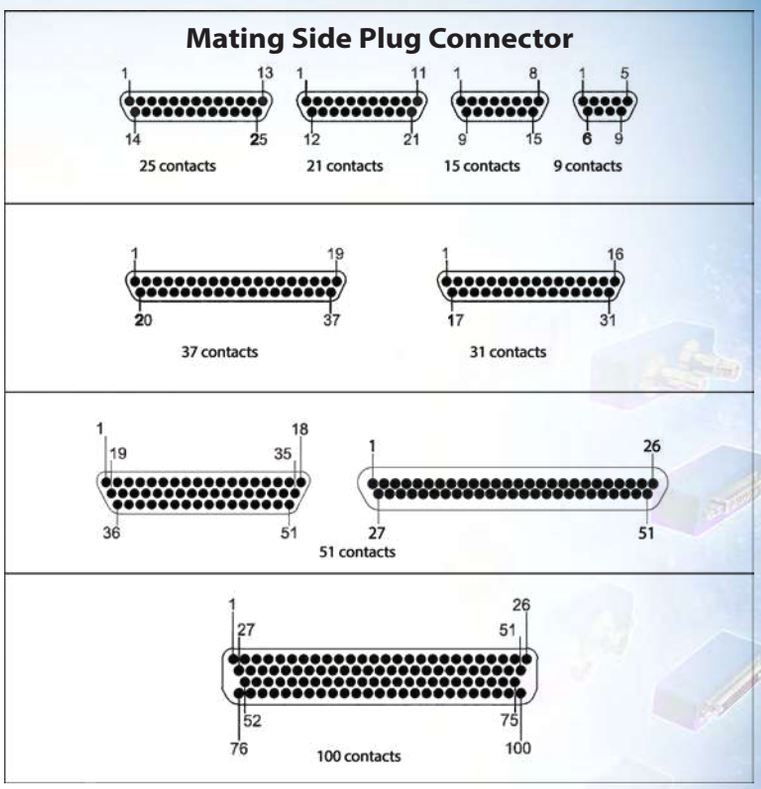

FEATURES	SPECIFICATION	TEST METHODS
Current rating	3 Amp	
Contact resistance	8 mΩ max.	MIL-STD 202 - Method 307
Insulation resistance	5000 MΩ min.	MIL-STD- 1344 Method 3003
Dielectric withstanding voltage - Sea level - Altitude 21 km	 900 V AC 600 V AC (solder cup) 600 V AC 150 V AC (solder cup)	MIL-STD- 1344 Method 3001
Contact spacing	1,27 mm / 0,050 inch	
Mating force	186 g max. x number of contacts	
Unmating force	15 g min. x number of contacts	
Contact retention	2,26 kg (5 pounds)	MIL-STD- 1344 Method 2007
Durability	500 min. mating cycles	
Temperature range - standard - operating	 -55°C - +125°C -55°C - +200°C	
Vibrations	20G - No discontinuity > 1µs	MIL-STD- 1344 Method 2005 - Condition IV
Shocks	50G - No discontinuity > 1µs	MIL-STD- 1344 Method 2004 - Condition E
Salt spray	48 hours	MIL-STD- 1344 Method 1001 - Condition B
Humidity	Insulation resistance > 1 MΩ	MIL-STD- 1344 Method 1002 - Except 7a and 7b

COMPONENTS	MATERIAL	CHARACTERISTICS
Male contact	Berylium copper	1,27 µm gold plated per MIL-C-45204
Female contact	Copper alloy	1,27 µm gold plated per MIL-C-45205
Metal shell	Aluminum alloy per QQ-A-200/8 type 6061	Chemical nickel
Plastic shell / Inserts	- 30% Glass fibre loaded polyester 94V0 (125°C) - LCP per MIL-M-24519 (200°C)	
Interfacial seals	Fluorosilicon per MIL-R-25989	
Hardware	Stainless steel series 300	Passivated
Encapsulant	Epoxy resin	
Wires	PTFE insulated silver plated copper	per NEMA-HP3

Nota : Size 120 contacts variation available upon request.

ERVAC Micro-D - Technical data

Module types

ERVAC-E-9M/F-I-MUD

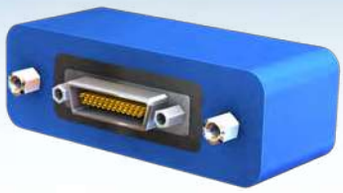

ERVAC-B-25M/F-I-MUD

ERVAC-C-37M/F-I-MUD

ERVAC-D-209M/F-I-MUD

ERVAC-D-51M/F-I-MUD

Custom designed 120 pins ERVAC module

ERVAC SpaceWire - Technical data

SpaceWire technology has grown organically from the needs of on-board processing applications. One of the principal aims of SpaceWire is the support of equipment compatibility and reuse at both the component and subsystem levels. Integration and test of complex on-board systems is also supported by SpaceWire with ground support equipment plugging directly into the on-board data-handling system. Monitoring and testing can be carried out with a seamless interface into the on-board system. SpaceWire is the result of the efforts of many individuals within the European Space Agency, European Space Industry and Academia.

SpaceWire is being widely used on many space missions by: ESA / NASA / JAXA / CNSA

SpaceWire is defined in the European Cooperation for Space Standardization ECSS-E50-12A standard.

Technical Data

ECSS-Q-ST-70-08	Space product assurance — Manual soldering of high reliability electrical connections
ECSS-Q-ST-70-26	Space product assurance — Crimping of highreliability electrical connections
ANSI/TIA/EIA-644	1995 Telecommunications Industry Association, "Electrical Characteristics of Low Voltage Differential Signaling (LVDS) Interface Circuits", March 1996
ESCC 3401/071	Connectors, Electrical, Rectangular, Microminiature, Solder Bucket Contacts with EMI Backshell, based on type MDM

Connectors

The SpaceWire connector has eight signal contacts plus a screen termination contact. A ninepin microminiature Dtype is specified as the SpaceWire connector. This type of connector is available qualified for space use.

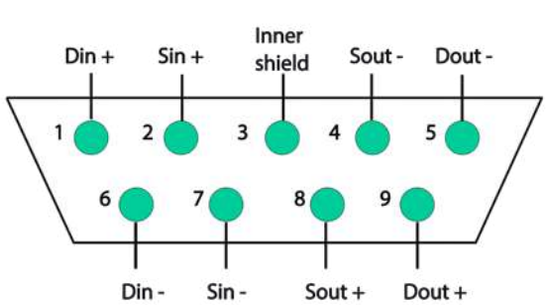

SpaceWire connector contact identification

The following test report gives a relevant basis to establish a clear comparison of electrical performances between the actual SpaceWire qualified connector couple and the insertion of PLUG IN feed through developed for AIT testing in vacuum chambers. As we can see on the eye patterns, we have a good margin with the mask limits for all the tested pin couples (1&6, 9&5, 2&7, 8&4) for all the tested feed throughs in worst case condition with maximum datarate (400Mb/s) and minimum voltage from emitter (250mV).

Note : Upon request, a 15 pins version is available to offer independent shieldings of each pair.

ERVAC SpaceWire - Technical data

Feedthrough qualification

This technical note is a validation of PLUG-IN feedthrough reference 0614-01, 0614-02, 0614-03 regarding electrical signal transmission dedicated to SpaceWire links.

Time Domain transmission measurements test procedure.

For speed data rate range from 50 to 3200 Mb/s, we can use the ParBERT81250 generator. If we need to generate signal over 3200 Mb/s we can use the N4903A (from 620 Mb/s to 12500 Mb/s) in this case, as the maximum SpaceWire speed is set to 400Mb/s we can use ParBERT81250.

Signal analyser CSA8000B is used to build a Eye Pattern and to measure several parameters like:
- Qfactor, Eye Height, Eye Width, RMS Jitter and Peak to Peak Jitter.

The signal is generated from 2 Ports (DATA+ & DATA-) to inject the signal in differential directly in the cable through the test jig without any balun. The PRBS binary sequence of the signal is set to 231-1 and the differencial peak-to-peak voltage is set to 0.5Vpp. (+250mv to -250mv swing)

The minimum guaranteed output level of an LVDS transmitter is ±250 mV. The required LVDS receiver input is ±100 mV.

The overall eye pattern from the LVDS transmitter to the LVDS receiver shall be comprised within the mask defined in figure 5.2b when the transmitter mask is conforming to figure 5.2a.

Eye pattern shall be frozen after 1000 acquisitions and the following parameters will be measured on it :

Mask go/no go test

Figure 5.2a

Eye diagram mask for transmitter requiremements

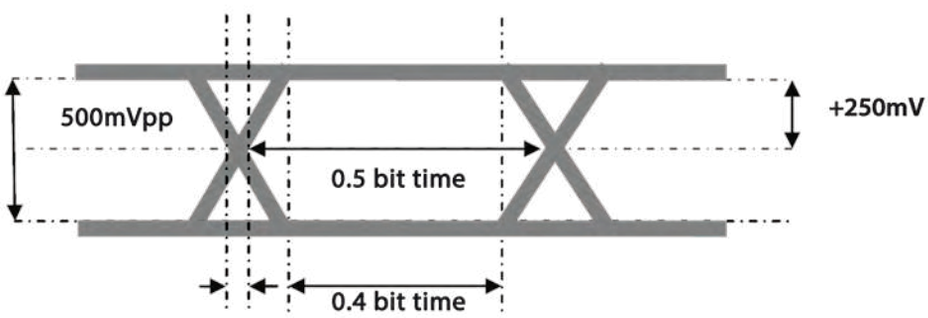

Figure 5.2b

Eye diagram mask for receiver requiremements

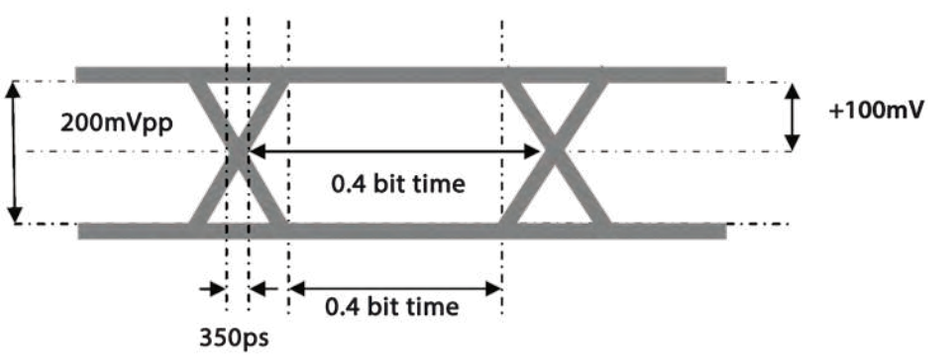

ERVAC SpaceWire - Technical data

Eye pattern measurement result for sample 0614-01 (Complete report available on request.)

Eye pattern screen shot at 400Mb/s

Reference without feedthrough

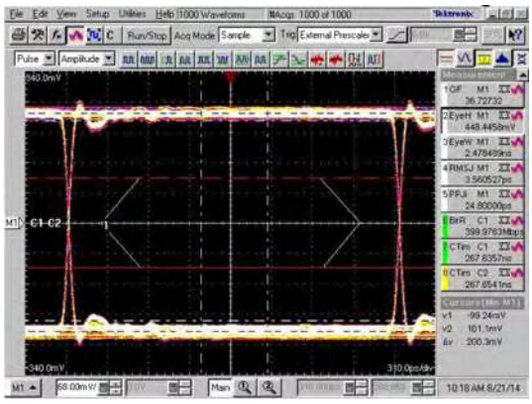

0614-01 - PIN 1-6-9-5

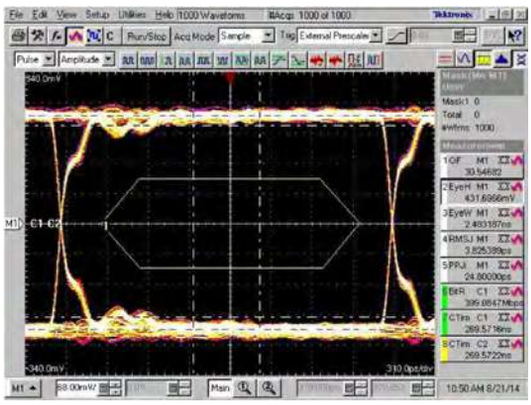

0614-01 - PIN 2-7-8-4

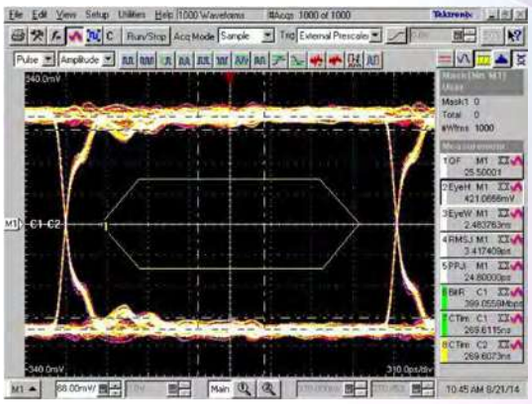

0614-01 - PIN 8-4-2-7

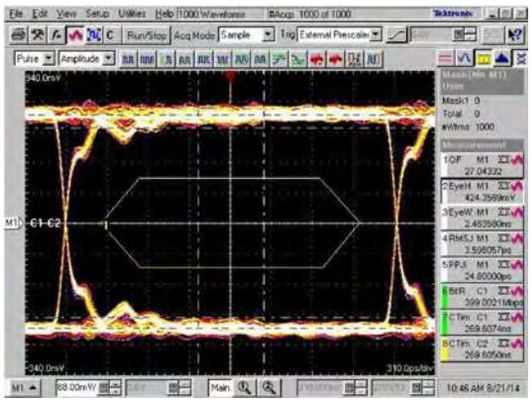

0614-01 - PIN 9-5-1-6

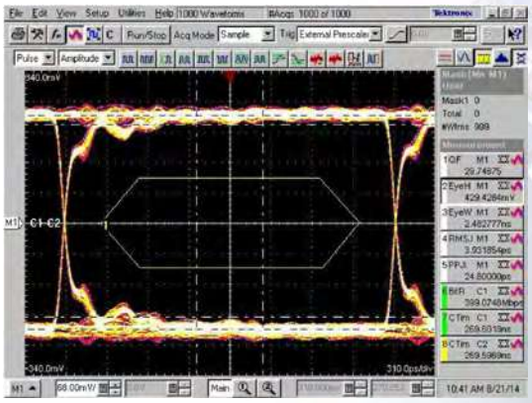

ERVAC Micro-D and Spacewire ordering informations

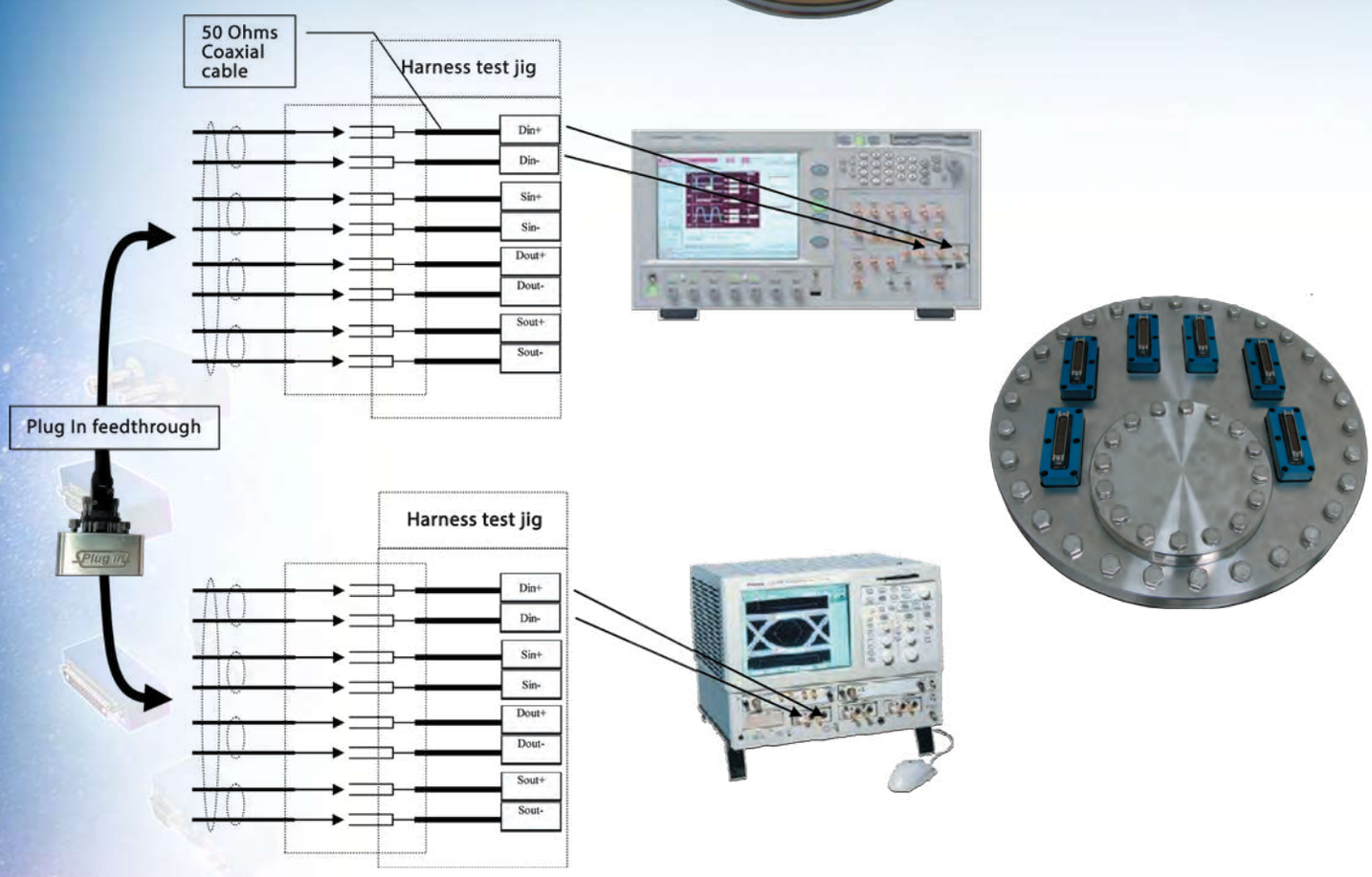

ERVAC	D 51	M/F	I	MUD

Series prefix ERVAC

Module sizes E / A / B / C / D

E 9
A 15, 21
B 25 to 51*
C 31, 37
D 2x9, 2x15, 21 to 120

Connector gender

M/F, M/M, F/F

Shell type

I = Nickel plated aluminium alloy
S = Gold plated brass

Contact type

MUD = Micro-D contact
SW = Spacewire

*** All standard double and three row Micro-D connectors (9-15-21-25-31-37-51) are fitting within the ERVAC B size**

ERVAC Optical fiber - Technical data

Two SMA or FC/PC type Optical Fibers in one standard ERVAC® module. A number of fiber optic links have to go through a pannel separating two volumes hermetically insulated (vacuum, liquid, gas, temperature, radiations, etc.). A fiber optic connexion is generally made of two male connectors with a female coupling part. It is this coupling part, with FC/PC, FC/APC or SMA interface, which will be the base of this range of hermetic feedthrough.

A standard coupling part between two connectors is a precision part which allows the alignment of the connectors ferrules. In the hermetic feedthrough this coupling part is made longer and a piece of fiber is glued inside to obtain an hermetic optical path. This fiber is chosen to match the fibers to be connected at each end of the feedthrough.

We offer the widest range of single-mode and multi-mode optical fibers.

Technical specifications	ERVAC®	Optical contact
Body Material	Aluminium blue anodized	Stainless steel
Vacuum level	> 1.10^{-8} mbar	
Leak rate	≤ = than 1.10^{-8} mbar.l/s	
Tightening torque	1,2 N.m	
Total Mass Loss	TML < 0,1%	
Collected Volatile Condensable Materials	CVCM < 0,01 %	

OPTICAL CONNECTOR VARIATIONS vs OPTICAL FIBER RANGE	
SMA F/F	
Step index :	from 100 to 1 000 µm core
Optical aperture :	0.37 or 0.22
For any wavelength :	UV or UV+visible or UV + IR or very large band
Max insertion loss :	< 3 dB @ 850 nm (2 dB for a 600 µm fiber)
FC/PC F/F	
Single-mode :	1 310 or 1 550 nm
Single-mode with low wavelength :	450 , 600 , 630 , 750 , 780 , 820 , 980 or 1 060 nm
Gradient index :	GI 50/125 , GI 62.5/125
Step index :	LCH 125 or 50 (visible + IR)
Max insertion loss :	< 1 dB @1 550 nm with SMF28 type single-mode fiber
SMA M/M	
Step index :	from 100 to 1 000 µm core
Optical aperture :	0.37 or 0.22
For wavelength UV or UV+visible or UV + IR or very large band	UV or UV+visible or UV + IR or very large band
Max insertion loss :	< 3 dB @ 850 nm (1.5 dB @ 850 nm for a 200 µm fiber)
FC/PC or FC/APC M/M	
Single-mode :	1 310 or 1 550 nm
Single-mode with low wavelength :	450 , 600 , 630 , 750 , 780 , 820 , 980 or 1 060 nm
Gradient index :	GI 50/125 , GI 62.5/125
FC/PC Max insertion loss :	< 1 dB @1 550 nm (0.3 dB @ 1 550 nm with SMF28 type single-mode fiber)
FC/APC Max insertion loss :	< 1.5 dB @ 1 550 nm (0.7 db @1 550 nm with SMF28 type single-mode fiber)
FC/PC or FC/APC M/M with polarization maintaining fiber	
Single-mode polarization maintaining fiber (PANDA type) :	1 310 or 1 550 nm
Single-mode polarization maintaining fiber (PANDA type) low wavelength :	450 , 600 , 750 , 780 , 820 , 980 or 1 060 nm

ERVAC Optical fiber - Technical data

ERVAC	D	2FO - FCPC	F/F	Optical fiber type

Series prefix ERVAC

Module size D

Contact arrangement

2FO - SMA
2FO - FCPC
2FO - CAPC

Connector gender

F/F or M/M

consult the factory.

Optical fibers also available in wired version on ERVAC-D type as well as with any vacuum flange such as ISO KF upon request.

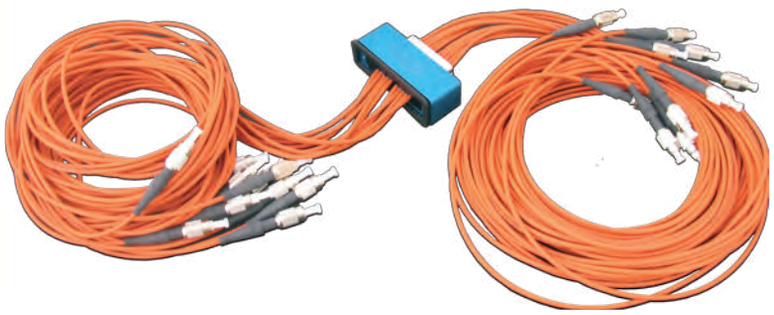

Part number examples :

ERVACD2FO-FA-SMF28	ERVACD2FO-ST-IP
ERVACD2FO-FC/APC	ERVACD2FO-APC-MONO
ERVACD2FO-FCA-MP15	ERVACD2FO-FC-SMF28
ERVACD2FO-FCPC-630	ERVACD2FO-PC-MULTI
ERVACD2FO-FDP60	ERVACD2FO-SMAFF
ERVACD2FO-FVP400	ERVACD2FO-SMA-FC
ERVACD2FO-SMA-GT	ERVACD2FO-TCL200

ERVAC DVI-I - Technical data

Technical Data

Electrical performance

ITEM	TEST CONDITION	REQUIREMENT
Contact resistance	Bulk resistance measured between plug solder tails and receptacle solder tails per ANSI/EIA-364-23	20 mΩ maximum, initial per contact mated pair - 10 mΩ maximum change from initial reading per contact mated pair
Shell resistance	Bulk resistance measured between ground leg on receptacle shield and the plug cable braid. Test current = 100mA - Test voltage = 5 Volts DC open circuit maximum per ANSI/EIA-364-06A-83	50 mΩ maximum, initial - 50 mΩ maximum change from initial reading
Insulation resistance	Test voltage = 500 Volts DC +/- 50V unmated and unmounted per ANSI/EIA 364-21 method C	1 GΩ minimum between adjacent contacts and contact and shell
Dielectric withstanding voltage	Test voltage = 500 Volts DC +/- 50V unmated and unmounted per ANSI/EIA 364-20 method C at barometric pressure of 15 psi	No flashovern no sparkover, no excess leakage, no breakdown
Contact current rating	Maximum ambient = 55°C - Maximum temperature change = 85°C per ANSI/EIA-364-70, TP-70	3.0 A maximum
Applied voltage rating		40 Volts AC (rms) continuous maximum on any signal pin with respect to the shield
Electrostatic discharge	Test unmated from 1 kV to 8 kV in 1 kV steps using 8 mm ball prob per IEC 801-5 - Contact discharge to shell - Air discharge perpendiculare to shell - Air discharge at angle to shell	No evidence of discharge to contacts at 8kV. Discharge to the shell is acceptable.
Signals Time Domain Impedance (T.M.D.S.)	Risetime = 330 pS (10%-90%) - S:G ratio per DVI pin designation - Differential measurement specimen environment imperdance = 100 Ω - Differential source-side receptacle connector mounted on a controlled impedance P.C.B. fixture per ANSI/EIA-364-108 draft proposal	100 Ω +/- 15%

Gasket : Viton

DVI connector variations are available :

- **DVI-I (Dual link) -** DVI-I (Integrated), it combines both digital and analog in the same connector
- **DVI-I (Single link)**
- **DVI-A -** DVI-A (Analog), it supports analog only.
- **DVI-D (Dual link) -** DVI-D (Digital), it supports digital signals only
- **DVI-D (Single link)**

ERVAC DVI-I - Technical data

Technical Data

Mechanical performance

ITEM	TEST CONDITION	REQUIREMENT
Mating force	One pair per ANSI/EIA-364-13 - Insertion speed: 1 inch (25,4mm) per minute	10.0 lbf (4,5 kgf) maximum
Unmating force	Mated pair per ANSI/EIA-364-13 - Withdraw speed: 1 inch (25,4mm) per minute	2,2 lbf (1,0 kgf) minimum - 8,8 lbf (4,0 kgf) maximum
Receptacle contact retention	Individual contact	1,0 lbf (0,45 kgf) minimum
Receptacle key retention	individual key	2,0 lbf (0,90 kgf) minimum
Plug contact retention	Push out from mating face - Individual contact	10 lbf (4,5 kgf) minimum
Plug key retention	Push out from mating face - individual key	10 lbf (4,5 kgf) minimum
Durability	Automatic cycling : 100 cycles per ANSI/EIA-364-09 at 100 +/- 50 cycles per hour	Contact resistance per EIA-364-23 : 10 mΩ maximum change from initial per contact pair - All samples to be mated - Shell resistance : 50 mΩ maximum (change from initial reading)
Vibration	15 minutes / axis per ANSI/EIA-364-28 method 5A	No discontinuities at 1 µs or longer 'each contact) when continuity is tested per EIA-364-46
Shock (mechanical)	Per ANSI/EIA-364-27, condition A (specified pulse)	No discontinuities at 1 µs or longer 'each contact) when continuity is tested per EIA-364-46
Cable pullout force	Tes for cable strain relief & termination integrity. Cable subjected to 25,0 lbf (11,3 kgf) static load for one minute while monitoring continuity. Isolate plug & receptacle interface from load.	No discontinuities greater than 1 µs.
Board insertion force		10 lbf (4,5 kgf) maximum
Cable flex	100 cycles in each of 2 planes - Dimension X = 3,7x cable diameter per ANSI/EIA-364-41 condition I	No discontinuities greater than 1 µs allowed during flexing on contacts or shields per EIA-364-46 - Dielectric withstanding voltage and insulation resistance tested per requirements of section 5.1
Normal force	For reference only	.050" pitch terminals : 75 grams typical .075" pitch terminals : 90 grams typical Ground plane : 100 grams typical
Thread torque	Mounted to panel; Test to failure; Tighten jackposts with torque gage until threads are stripped and jackpost turns freely	5,0 lbf in (5,76 kgf cm) minimum

Additional general specifications are:

Plug:

-LFH (Low Force Helix) style contacts
-fully shielded RFI/EMI can
-grounding detents on mating shell
-solder tails for cable termination
-positive retention jackscrew: thread 4-40 UNC-2A

Receptacle:

-high cycle, dual beam, LFH shrouded contacts
-polarization achieved by a "D" shaped housing/shield
-single piece shield with integral ground leg
-shield protrudes for ESD considerations
-solder tails for thru hole board mount
-plastic retention pegs
-jackposts: # 4-40 UNC-2A&B threads.

ERVAC HDMI Technical data

HDMI®
HIGH-DEFINITION MULTIMEDIA INTERFACE

The Know-How in Hermetic Plug in Feed-Throughs ®

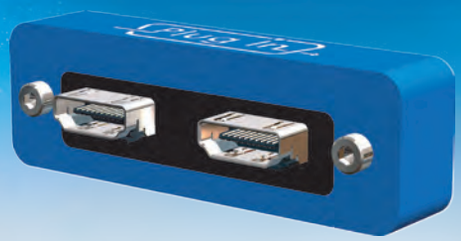

Technical Data

HDMI (High-Definition Multimedia Interface) is a proprietary audio/video interface for transmitting uncompressed video data and compressed or uncompressed digital audio data from an HDMI-compliant source device, such as a display controller, to a compatible computer monitor, video projector, digital television, or digital audio device. With 18Gb/s of bandwidth, HDMI can accommodate the future enhancements and requirements of audio/video equipment.

ELECTRICAL PERFORMANCE :	
Low Level Contact Resistance:	Initial 10mΩ max. Per EIA 364-23
Contact Current Rating:	0.5A min. Per EIA-364-70A
Dielectric Withstanding Voltage:	500V AC. Per EIA364-20C

MECHANICAL PERFORMANCE :	
Durability Type C:	5,000 cycles at 100 ± 50 cycles per hour. Per EIA 364-09
Insertion Force:	44.1 N (4.5kgf) max. Per EIA 364-13
Withdrawal Force:	7 N Min / 25N max. Per EIA 364-13

The Pinout of a HDMI connector (as viewed from the socket).

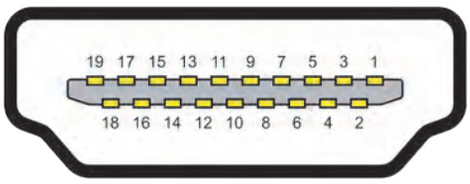

MATERIAL :	
Housing:	High Temperature Thermoplastic, complies with UL 94V-0
Contact:	Copper alloy, Selective gold plated on contact area, 100µ" min. tin plated on soldering tail, 50µ" min. nickel under-plated overall
Shell :	Stainless Steel or Copper Alloy

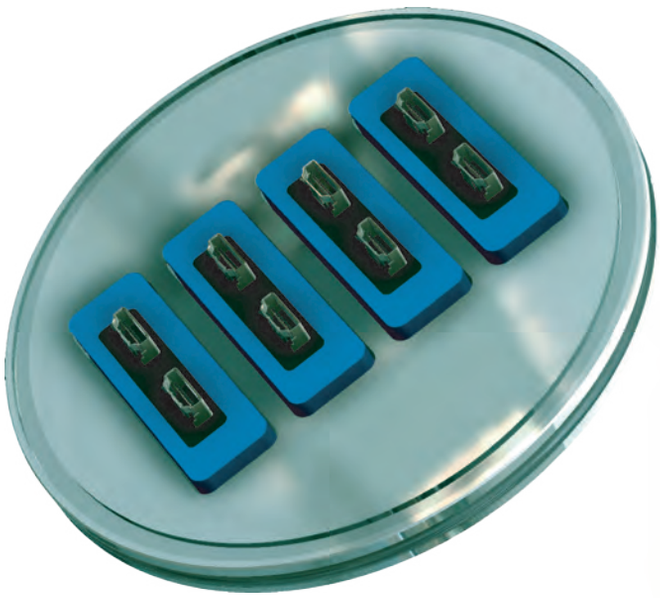

ISO K DN160 Flange equiped with four ERVAC-D-2HDMI

ERVAC USB A - 2.0
Technical data

Universal Serial Bus (USB) is an industry standard that defines the cables, connectors and communications protocols used in a bus for connection, communication, and power supply between computers and electronic devices. The USB bus was really born from the alliance in 1994 of seven industrial partners (Compaq, DEC, IBM, Intel, Microsoft, NEC and Northern Telecom) who joined together in order to create the USB standard. The USB bus was originally designed for the ease of data transfer especially defining a "universal" and "Plug & Play" connectivity, usable for a mouse as well as a modem or monitor. Designed also to meet the need for integration between the PC and the mobile phone world and finally to meet the need for multiple extensions outside the PC, indeed we can, in theory connect up to 127 devices.

Technical Data

Applicable documents and specifications :

EIA-364. / MIL-STD-202. / MIL-STD-1344A. / USB 2.0 SPECIFICATIONS

Electrical characteristics :

Description	Test condition	Requirement
Low Level Contact Resistance	**EIA 364-23** Mate connectors: apply a maximum voltage of **20** mV and a current of **100** mA	30 milliohms MAXIMUM
Insulation Resistance	**EIA 364-21** Unmate & unmount connectors: apply a voltage of 500 VDC between adjacent terminals and between terminals to ground.	**1000** Megohms MINIMUM
Dielectric Withstanding Voltage	**EIA 364-20** Unmate connectors: apply a voltage of 500 volts VAC for 1 minute between adjacent terminals and between terminals to ground.	No breakdown; current leakage < 0.5 mA
Contact Capacitance	**EIA-364-30** Test between adjacent circuits of unmated connector at 1 KHz. The object of this test is to detail a standard method to determine the capacitance between conductive elements of a USB connector.	2 pF Maximum per Contact
Contact Current Rating	**EIA 364-70 Method B** When measured at an ambient temperature of 25 . With Power applied to the contacts, the T shall not exceed + applied to the contacts, the 30 at any point in the USB connector under test The object of this test procedure is to detail a standard method to assess the current caring capacity of mated USB connector contacts.	1.5A at 250Vac minimum & Temperature rise: +30°C MAXIMUM

ERVAC USB A - 3.0 Technical data

The Know-How in Hermetic Plug In Feed-Throughs ®

Mechanical characteristics

Parameter	Procedure	Requirement
Mating force	**EIA 364-13** Measure the force necessary to mate the connector assemblies at a max rate of 12.5 mm per minute.	N 35max
Unmating force	**EIA 364-13** Measure the force necessary to unmate the connector assemblies at a max rate of 12.5 mm per minute.	15 N min
Durability	**EIA 364-09** 25 cycles. Done at a max rate of 200 cycles per hour.	No physical damage to any part of the connector and cable assembly.

USB 3.0, or SuperSpeed USB, is the successor to USB 1.x and 2.0 standards. At plug In, we have synthesized its characteristics in order to present you immediately a hermetic feedthrough compatible with this new standard. The SuperSpeed USB is announced with transfer speeds, 6 to 10 times faster than USB 2.0, it is backward compatible with older standards, synchronizes devices faster when connected, and, importantly, manages much better the energy consumption (standby, start-up, deactivation if necessary). This new standard of the Universal Serial Bus mainly has a significantly improved transfer speed, since we speak in theory of 5 Gbit / s (4.8 Gbit / s or 600 MB / s). For the record, the USB 1.x could communicate in low speed mode at 1.5 Mbit / s and between 12 Mbit / s and 1.5 MB / s in fast mode (Full Speed). USB 2.0 (High Speed) reaches 480 Mbit / s (60 MB / s).

Plug In's new SuperSpeed mode USB A 3.0 feedthrough provides a theoretical data signaling rate of 5.0 Gbit/s - Leak rate of < 1 x 10^{-8} mbar.l/s

The connections on the atmospheric side and vacuum side should not exceed a maximum cable length of 5 meters.

ERVAC Firewire IEEE 1394
Technical data

FireWire is the trade name given by Apple to a multiplexed serial interface, also known as the IEEE 1394 standard and also known as the i.LINK interface, a commercial name used by Sony. It is a computer bus conveying both data and control signals of the different devices it connects. As a real Plug and Play, it can be used to connect all kinds of bandwidth-hungry devices that require stable data throughput, especially for hard drives and digital camcorders. It allows you to power a device, as well as connect 63 devices per bus, ensuring their connection / disconnection while the system is running (known as "Hot plug"). Up to 1024 buses can be connected via gateways.

Technical Data

This product conforms to IEEE 1394. With only one type of connector, the Firewire ERVAC can be connected to several digital peripheral equipment. IEEE 1394 connector series capable of accommodating data rates up to 400Mbps.

Applicable documents and specifications :

EIA-364. Electrical Connector/Socket Test Procedures
IEC Test Methods)
Qualification Test Report (IEEE 1394 External Serial Bus Connector)

Mechanical and electrical characteristics

Voltage	40 Volts AC (RMS)
Current	1.5 Amps, signal application only
Contact resistance	30 milliohms max.
Insulation resistance	100 Megohms min.
Dielectric withstanding voltage	No breakdown; current leakage < 0.5 mA
Contact Current Rating	1.5A at 250Vac minimum
Connector Mate force	35 N maximum
Connector Unmate force	10 N minimum

Material and Finish

Housing	Thermoplastic, UL94V-0, black
Contact	Copper alloy, palladium nickel, gold and tin plated, nickel underplated
Gasket	Viton

ERVAC RJ45 Ethernet
Technical data

RJ45 is the common but inaccurate name for the 8P8C modular connector (8 positions and 8 electrical contacts) commonly used for Ethernet connections, and for telephone connectors. The "RJ" references come from the name «registered jack» which is a part of the Code of Federal Regulations in the United States for telephone networks, and which in fact means not connectors, but the official standard pinouts.

The most common use of the RJ45 connector is Ethernet cabling using four pins (two pairs) or eight pins (four pairs). It is also used as desk phone connectors and for computer network applications such as ISDN and T1.

But, more and more, it is a connection using the eight points of contact that is used to connect the four pairs needed to 1 gigabit per second networks and pre-wire the buildings for all "low current" applications (low power and low voltage) that do not require a lot of separate drivers. Similarly, the 8P8C connector, said RJ45 allows several types of cables, twisted in pairs or not, with or without shielding.

Plug In has, based on this connector interface, designed a rugged versatile ERVAC connector feed-through for Cat. 5e and Cat. 6A, that ensures reliable protection and the convenience of easily mating under the most difficult and harsh environments.

Technical Data

Mechanical and electrical characteristics	
Interface connector	RJ45 Cat. 5e per EIA TIA-568-B2/ RJ45 Cat. 6A per EIA TIA-568-B2 (channel)
Strength of current	1.2 A max. to 25°C
Voltage	100 VDC
Contact resistance	20 mΩ max.
Insulation resistance	500 MΩ
Electric strength contact to contact	1000 VDC 60 sec.
Electric strength contact to metal Housing	1500 VDC 60 sec.
Materials	
RJ45 Socket metal housing	Copper alloy, nickel plated
RJ45 Socket and plug connector plastic housing	PBT (black), flame protection per UL 94-V0
RJ45 Socket and plug contacts	Phosphor bronze, gold plated
RJ45 plug connector metal housing	Copper alloy, nickel plated

ERVAC RJ45 Ethernet
From design to production

Technical design on SolidWorks

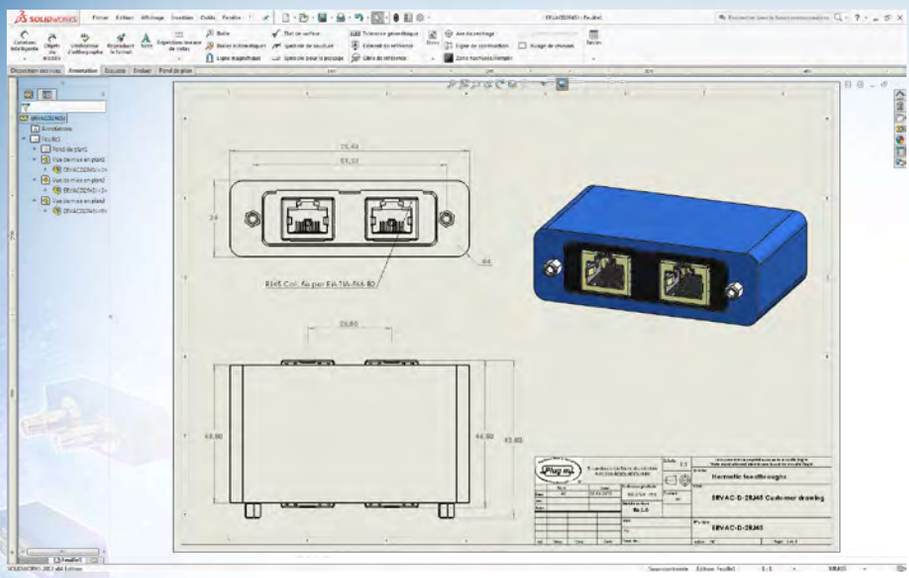

3D Model simulation

Full functional prototype

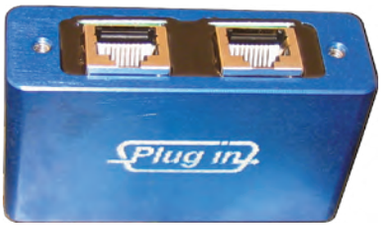

Flange assembled Prior leaktest and shipment

Finite Element Analysis (FEA)
Control of mechanical stress due to pressure effects

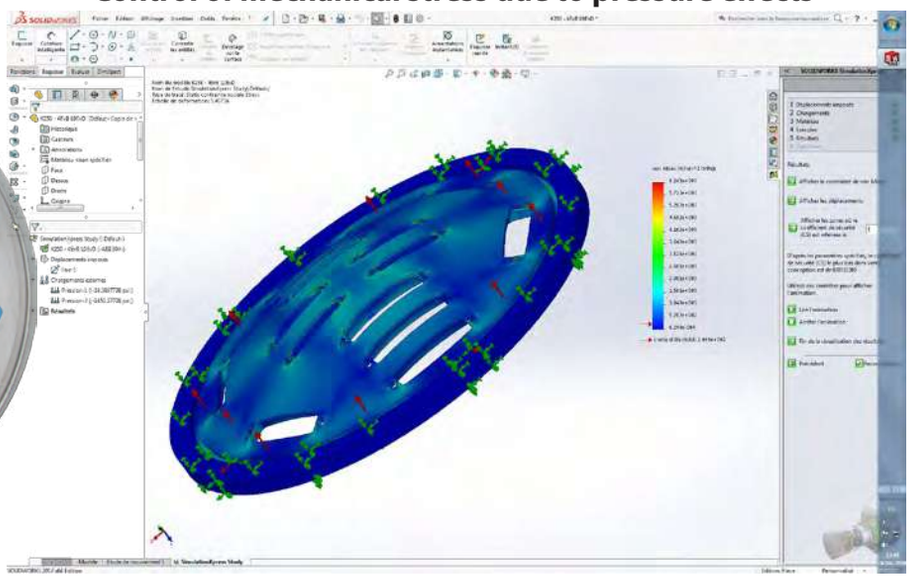

ERVAC MIL-STD-1553B
Technical data

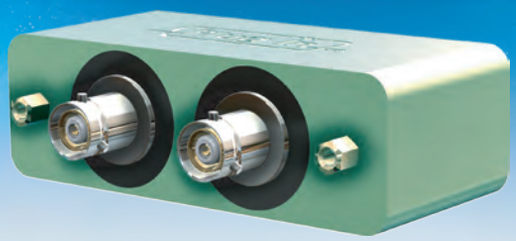

The digital data bus was designed in the early 1970's to replace analog point-to-point wire bundles between electronic instrumentation. The latest version of the serial local area network (LAN) for military avionics, currently known as MIL-STD-1553B, was issued in 1978. After 35+ years of familiarity and reliable products, the data bus continues to be a popular militarized networking solution.

Connector Types :

There are several types of connectors used for such a bus and at the coupler stubs, the most common of which is the concentric twinax connector. These connectors typically have three bayonet coupling slots (plugs) or lugs (jacks) known as TRB type, which have the same envelope size as a coaxial BNC connector. The center contact is high (positive) connected to the twinax blue wire and the cylindrical contact is low (negative) connected to the twinax white wire. The outer body of the connector is the overall shielding.

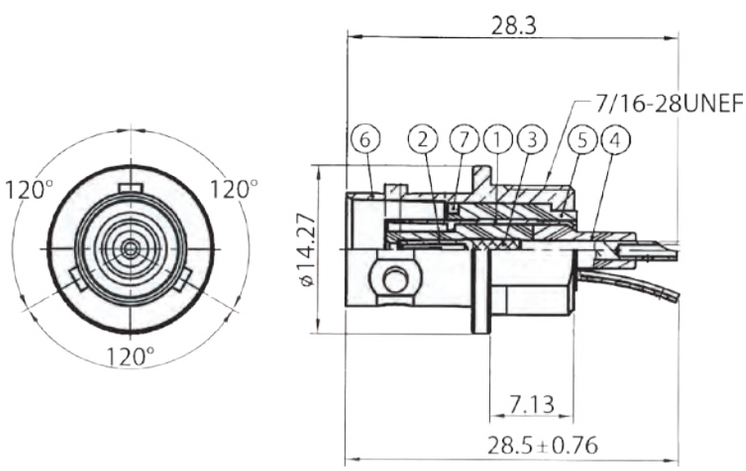

DRAWING LIST		
№	Description	Material
①	Contact body	Gold plated Brass
②	Insulator	Teflon
③	Contact pin	30 µ" Gold plated Beryllium Copper
④	Insulator	Teflon
⑤	Insulator	Teflon
⑥	Body	Nickle plated Brass
⑦	Lock ring	Nickle plated Brass

Since the MIL-STD-1553B does not specify the type of connector to use in data bus abpplications, the connectors must be compatible with the cable required by the specification which are listed below.

MIL-STD-1553B Data Bus Requirements	
Communications Line	
Cable Type	Two-conductor twisted pair
Capacitance	30 pF/ft. max
Twist	4 per ft. min
Characteristic Ω (Z0)	70 to 85 ohms @ 1 MHz
Attenuation	1.5 dB/100 ft. @ 1 MHz max
Shielding	75% coverage min.
Stub Voltage	1.0V to 14.0 minimum signal voltage (transformer coupled) 1.4V to 20.0V minimum signal voltage (direct coupled)

ERVAC ORDERING INFORMATION DVI, HDMI, USB, IEEE1394, 1553B and RJ45

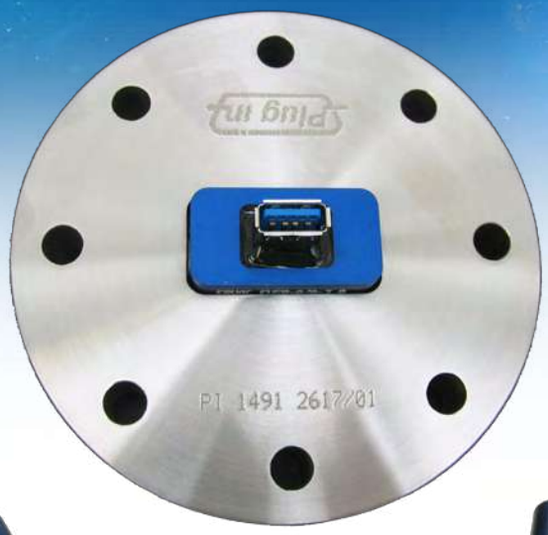

Ordering P/N

ERVACEUSBA_A
ERVACEUSB_A/A_3.0
ERVACEUSB_A/B
ERVACEUSB_B/B

ERVACA1IEEEF_F

ERVACD2HDMI

ERVACD2USBA_A
ERVACD2USB3.0_F/F

ERVACD2RJ45F_F

ERVACD2IEEEE_F/F

ERVACD2TX_1553B

ERVACD_DVI_29_F/F
ERVACD_DVI_D_F/F
ERVACD_DVI_IS_F/F
ERVACD_DVI_ID_F/F
ERVACD_DVI_A_F/F
ERVACD_DVI_DD_F/F
ERVACD_DVI_DS_F/F

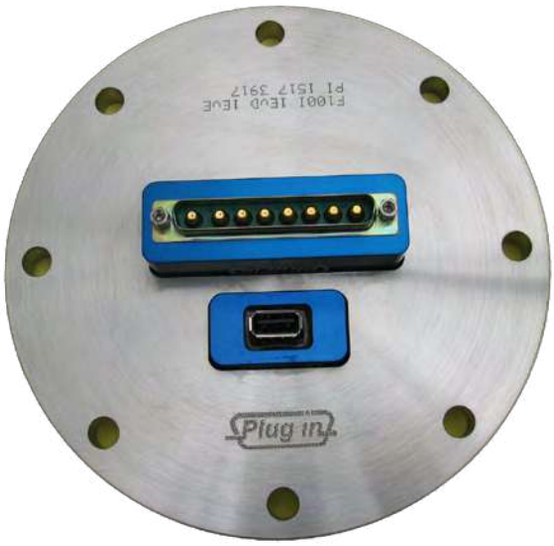

Specific module for N and TNC coaxial contacts Flange Cutout

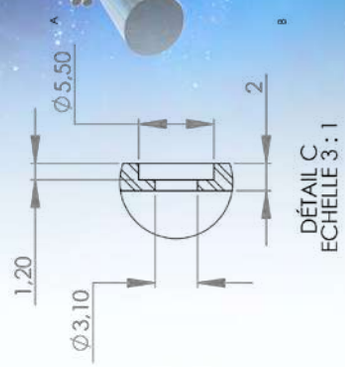

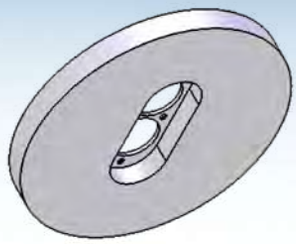

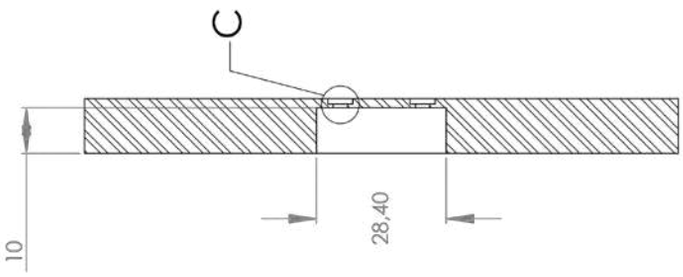

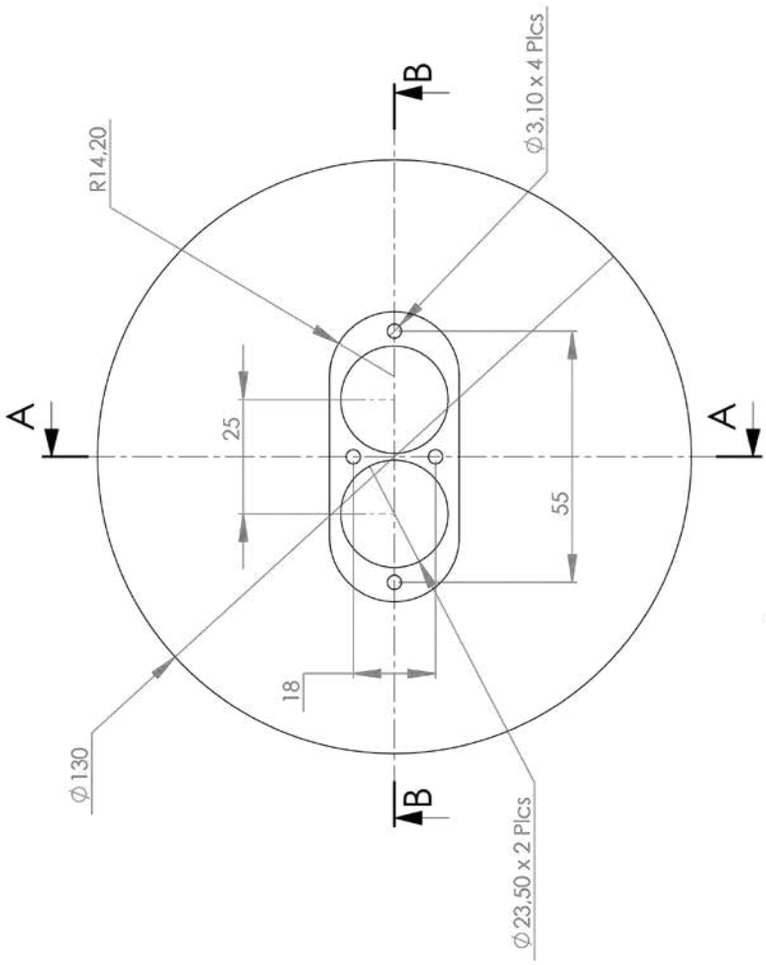

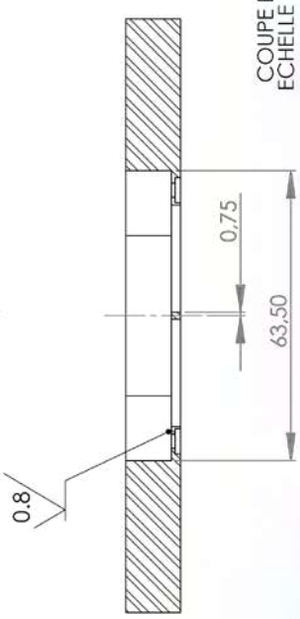

Plug In
5 rue du corps franc du sidobre
F-81210 ROQUECOURBE

	Nom	Date
Dess.	A. L.	09/09/05
Ver.		
Appr.		

Tolérance générale: ±0.1 /2°
Etat de surface: Ra 1.6
Mat: Inox
Fin.
Trait. th.:
Ind. | Dess. | Desc. | Date

Echelle: 1:1
Format: A3
Famille: SUPPORT de TEST
TITLE: Support de Test DN100 Module 2N
N° article: PL 3605 0531
Indice: NC
Page : 1 de 1

Specific module for N coaxial contacts

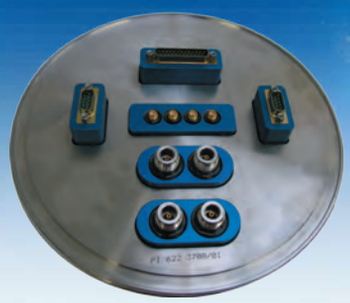

The N connector was designed initially in the 1940s by Paul Neill for the US Navy. Later on it became standardized per IEC 60169-16. N connectors can be found in many RF applications in all markets. The N type connectors with screw coupling are fully interchangeable with N connectors made to the MIL-C-39012 specification. Designed for use in all systems where very good R.F. and mechanical performances are critical, whether it be at low or high frequencies.

Technical data

N Coaxial connector - Electrical specifications

Impedance	50 Ω nominal
Frequency	0–11 GHz / 18 GHz with rigid cables
Voltage Rating	1500 Volts peak
Dielectric Withstanding Voltage	2500 Volts rms
VSWR	1.3 max. 0–11 GHz
Contact Resistance	Center contact 1.0 mΩ
	Outer contact 0.2 mΩ
Insulation Resistance	5000 MΩ (min)

Material specifications

PARTS NAME		MATERIAL	FINISH
Center Contact	Male	Brass	Gold or Silver plated
	Female	Phosphor Bronze (nominal) or Beryllium Copper	Gold or Silver plated
Metal parts		Brass	Nickel
Insulators		Teflon	None
Clamp gaskets		Silicone rubber, Synthetic rubber	None
Crimp ferrules		Annealed copper	Nickel

Gasket Viton

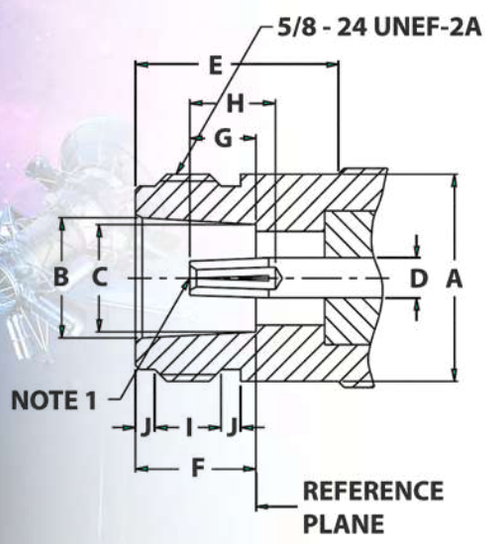

Letter	Millimeters [Inches]	
	Minimum	Maximum
A	–	15.93 [.628]
B	8.53 [.336]	8.74 [.344]
C	8.03 [.316	8.13 [.320]
D	3.00 [.118]	3.15 [.124]
E	10.72 [.422]	–
F	9.04 [.356]	9.19 [.362]
G	4.75 [.187]	5.26 [.207]
H	5.33 [.210]	–
I	4.37 [.172]	5.13 [.202]
J	1.19 [.047]	1.96 [.077]

Specific module for TNC coaxial contacts

The TNC connector was designed as a threaded version of the BNC to improve RF performance stability at higher frequencies from DC up to 11 GHz. The threaded coupling mechanism improves control over the interface dimensions and allows them to be used under a higher environmental load than BNC, especially under a high vibration load. It is standardized according to IEC 60169-17.

Electrical data	**Requirements**
Impedance	50Ω
Frequency range	DC… 11 GHz
Dielectric withstanding voltage (at sea level)	1,5kV rms, 50 Hz (depending on cable)
Working voltage (at sea level) unmated	500 V rms, 50 Hz (depending on cable)
insulation resistance	≥ 5.103 MΩ
Contact resistance	
Center contact	≤ 1,5 mΩ
Outer contact	≤ 1mΩ
RF-leakage (between 2 and 3 GHz)	≥ 60 dB

Mechanical data	**Requirements**
Coupling nut torque	
recommended	46 Ncm…69 Ncm / 4,1 in. Lbs
proof torque	170 Ncm / 15,0 in. Lbs
Coupling nut retention force	≥ 450 N / 101,2 lbs
Contact captivation	≥ 27 N / 6,1 lbs

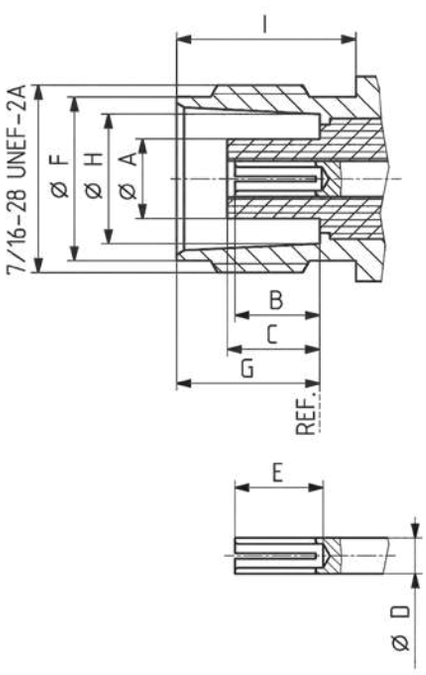

	Jack	
	min.	**max.**
A	---	4,72/,186
B	4,72/,186	5,23/,206
C	4,78/,188	5,28/,208
D	2,06/,081	2,21/,087
E	4,95/,195	---
F	9,60/,378	9,70/,382
G	8,31/,327	8,51/,335
H	8,10/,319	8,15/,321
I	10,52/,414	---

Specific module for N and TNC
Module dimensions and manufacturing examples

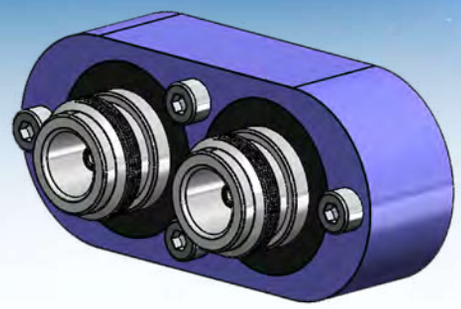

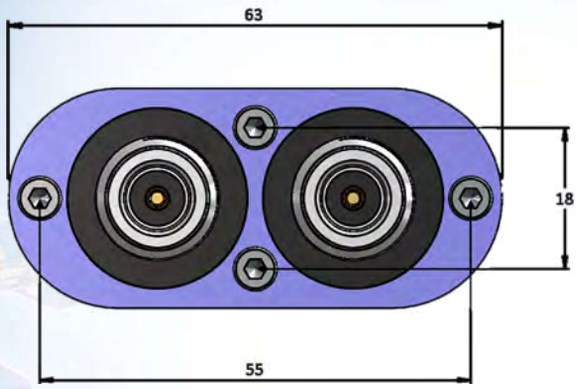

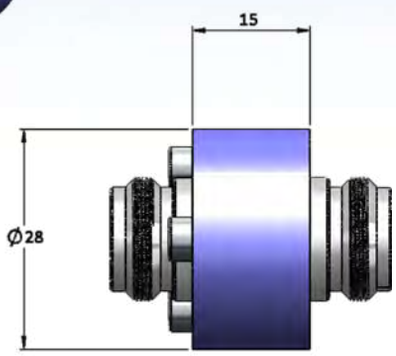

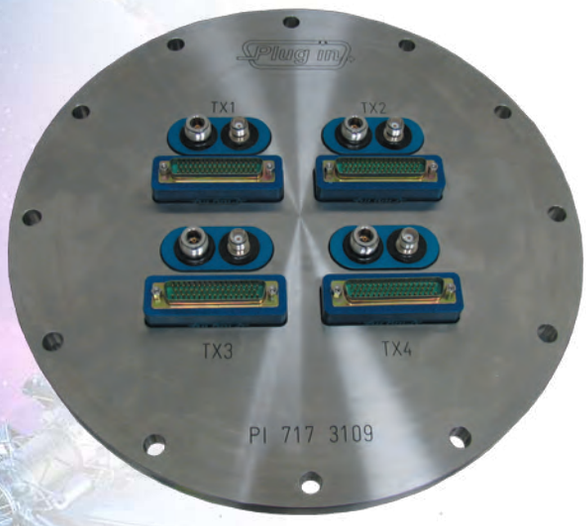

Ordering P/N :

MODULE_F_F_2N50 : 1 module equiped with 2 N type connectors
MODULE_F_F_2TNC : 1 module equiped with 2 TNC type connectors
MODULE_F_F_N_TNC : 1 module equiped with 1 N and 1 TNC type connectors

MODULE-F connector feedthroughs

Designed as complementary to the ERVAC® product range, the hermetic feedthroughs of the MODULE-F range are dedicated to all applications using heavy and / or shielded cables. These modules are distinguished from ERVAC® modules by 4 fixing points instead of 2 and located on the air side.

MODULE-F connector feedthroughs are existing in one single size. These modules are characterized by their extreme ruggedness and versatility.

The design of the MODULE-F allows the integration of all the available connectors integrated into the ERVAC range.

- D-Sub normal density
- D-Sub high density
- Mixed layout D-Sub
- Micro-D
- ECSS-E50-12A Spacewire
- Thermocouples
- BNC, BNO, TNC, SHV, MHV
- SMA, PC2.92, PC2.4, PC 1.85
- RJ45, USB A, 1553B
- Reynolds High voltage
- Optical fiber
- DVi Connectors, HDMI
- IEEE1394 - Firewire
- Blind plugs
- Other connector type upon request

For more technical informations concerning the different types of connectors, please refer to the ERVAC range pages.

Standard flange configurations			
Flange type	Air side	Vacuum side	Cutout number
ISO K DN100			1
ISO K DN160			4
ISO K DN200			9
ISO K DN250	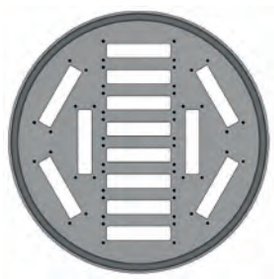		14
ISO K DN320	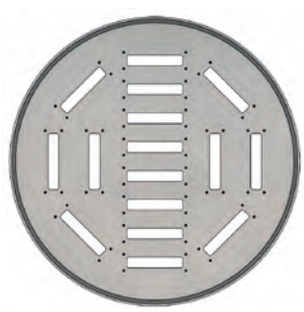		16

The products of the MODULE-F range are totally removable and reversible.

MODULE-F - Standard dimensions

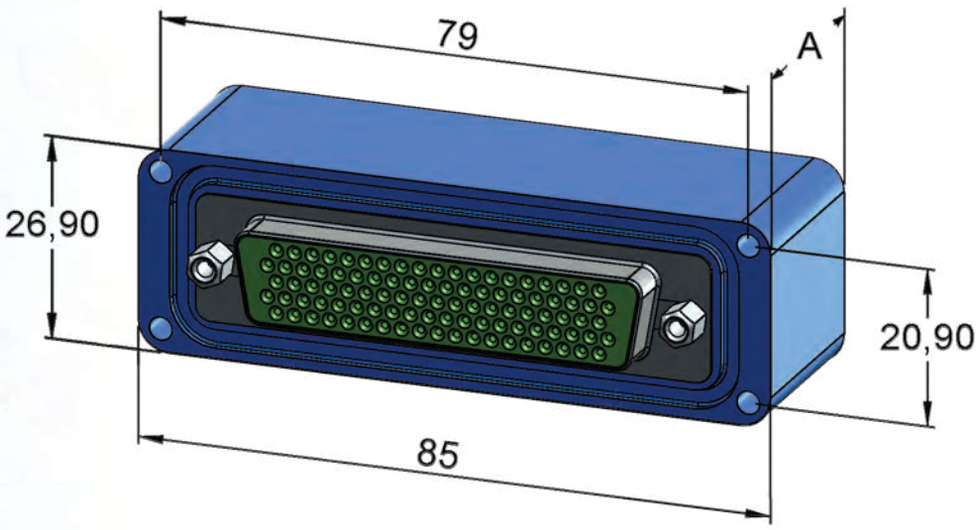

Dimension A is depending on connector type

Note : The **D-Sub high density 104 contacts** is only available with this type of module to insure an improved mecanical strength during unmating and with large and heavy harnesses.

MODULE-F - Mounting process

The products of the MODULE-F range are totally removable and reversible.

1 - Insert the 4 screws on the module from the air to the vacuum side
2 - Properly clean the mounting flange with iso-propyl alcohol
3 - Properly clean the flat viton gasket with iso-propyl alcohol
4 - Place the flat viton gasket in the seal groove of the module
5 - Place the MODULE-F against the vacuum flange from the air side
6 - Tighten the 4 screws on the air side by respecting the tightening torque (see below)

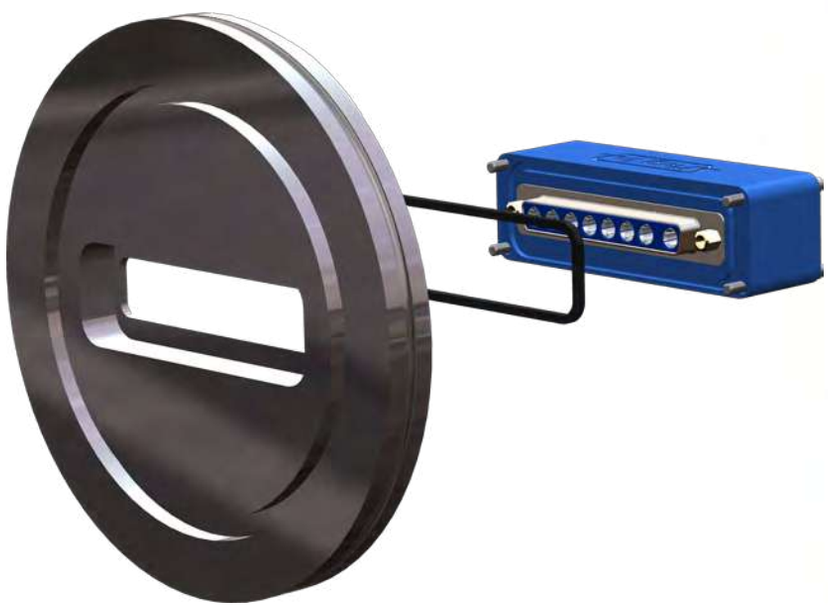

All surfaces should be cleaned before mounting. After first vacuum drop down, screws may be tightened again.

Recommended surface roughness < Ra 0,8 - Tightening torque : 1,2 N.m

Modules may be delivered as spare parts or fully assembled and tested on flange.

Leakrate : < 1.10-8 mbar.l/s - Temperature Range : -40°C / +80°C

MODULE-F - Cutout dimensions

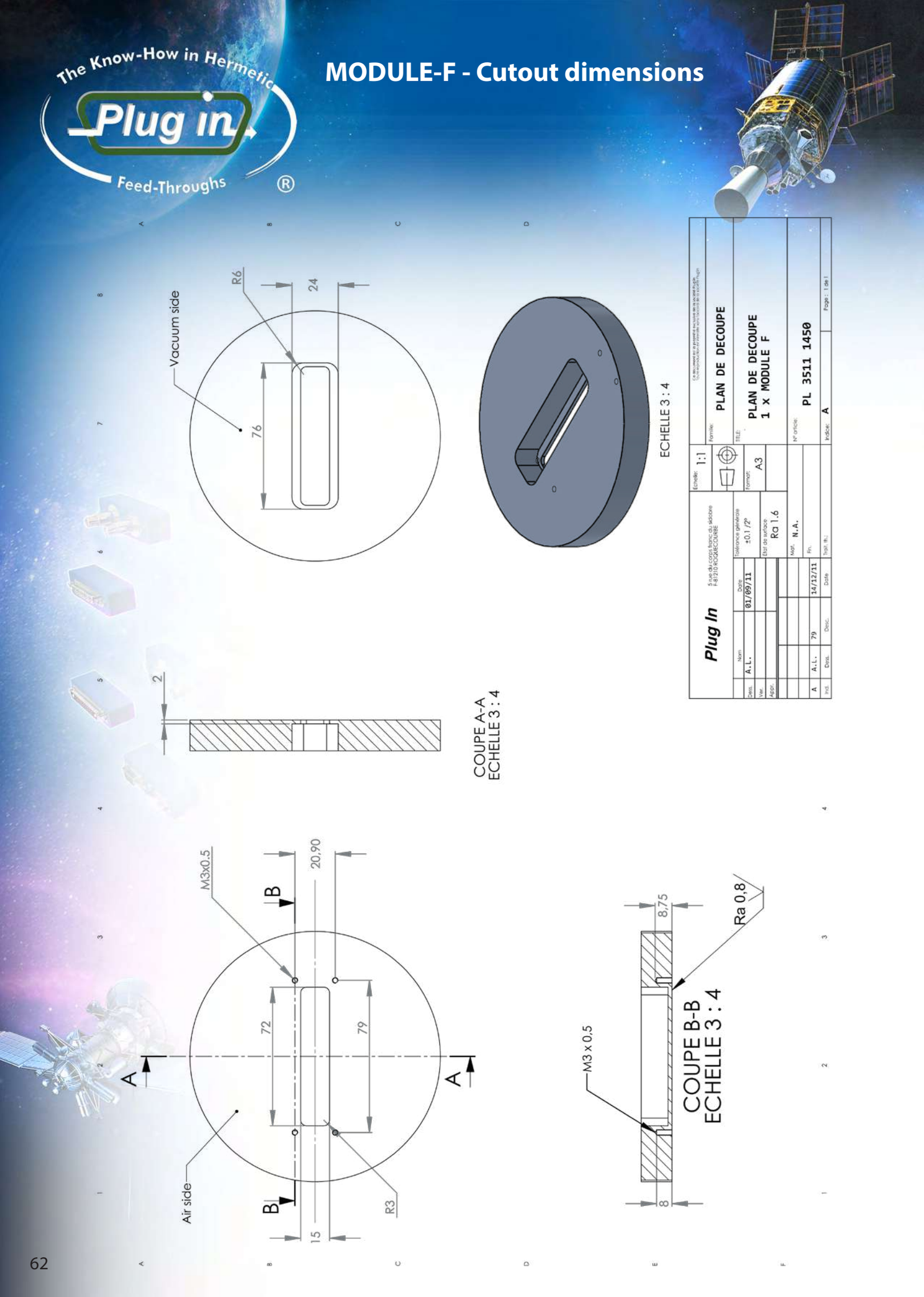

Module-F manufacturing examples

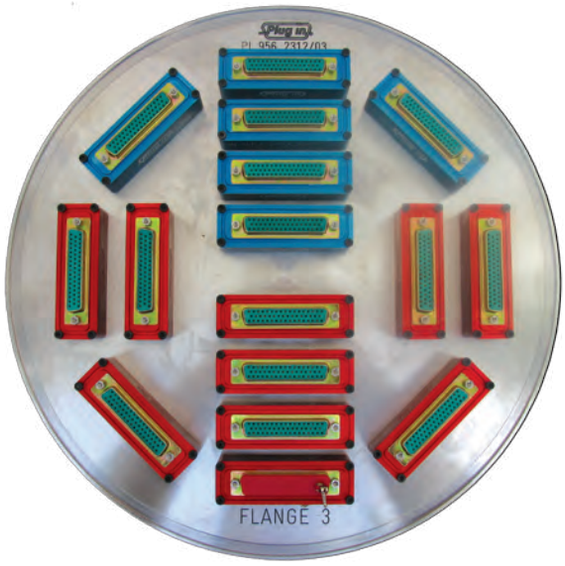

MODULE-F ordering informations

MODULEF	-	50	M/F	I	ND

Series prefix MODULE-F

Module sizes : only available in size D

Contact arrangement

Normal density : 9, 15, 25, 37, 50 and 2 x 9
High density : 15, 26, 44, 62, 78, 104 and 2 x 15
Micro-D : 9, 2x9, 15, 2x15, 21, 25, 31, 37, 51 and 100
Space wire : 9 and 2x9

Power, high voltage or coxial

1W1, 5W1, 2W2, 2W2C, 3W3, 3W3C, 7W2, 11W1, 5W5
5W5, 9W4, 13W3, 17W2, 21W1, 8W8, 13W6, 17W5
21WA4, 25W3, 27W2, 7W7, 24W7, 36W4, 43W2, 47W1
SMA* : 2SMA, 3SMA, 4SMA
PC 2,92* : 2C292, 3C292 or 4C292
PC 2.4* : 2C2.4, 3C2.4 or 4C2.4
PC 1,85* : 2C185, 3C185 or 4C185
BNC* : 1BNC, 2BNC
SHV* : 1SHV, 2SHV
Reynolds* : 2REY, 4REY
DVI : DVI29 (Other DVI connector sizes upon request)
HDMI : 1HDMI
RJ45* : 1RJ45, 2RJ45
USB A* : 1USB, 2USB
1553B : 2C1553B
IEEE 1394* : 1FW

Optical fiber* :

SMA = 2SMA
FC = 2FC
FP = 1FC + 1PC
PC = 2PC

Connector gender

M/F, M/M**, F/F**

Shell type

I = Zinc plated steel or wire to wire
S = Gold plated brass

Contact type

C = Coxial D-SUB size 8, SMA, SMA 65Ghz, BNC, TNC,
HD = High density contact size 22
HV = High voltage contact size 8, SHV, Reynolds
MUD = Micro-D contact
ND = Normal density contact size 20
P = Power contact size 8

Thermocouple normal density size 20 machined contact

TE01 or TE02*** = Chromel / Constantan
TJ01 or TJ02*** = Iron / Constantan
TK01 or TK02*** = Chromel / Alumel
TN01 or TN02*** = Nicrosil / Nisil
TT01 or TT02*** = Copper / Constantan

Part number for blind module kit including blind module, flat gasket and 4 x M3 screws : PL 2609 1189

* Only available in F/F versions
** Option not available for high density contact size 22 and for mixed layout D-SUB
*** TT01 = thermocouples in line - TT02 = pairs

Plug In - know how
Machining

We , at PLUG IN, are very much concerned by the quality of even the smallest spare component used into our hermetic feedthroughs or assemblies.

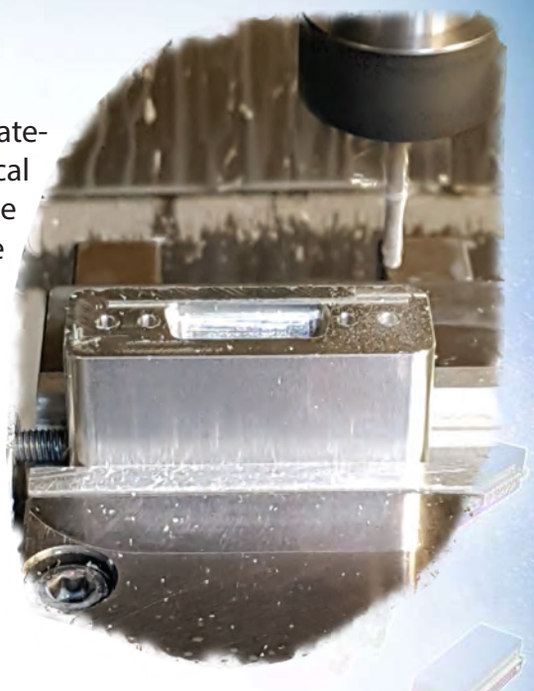

Our components are machined from the very best quality of materials by high skilled workers using the latest up-to-date numerical controlled grinders , lathes and screw machines. For instance the body of our feedthroughs are made from aeronautic grade aluminium alloys and the vacuum flanges, female screwlocks or threaded inserts (helicoil) are made of stainless steel.

During and after machining, all those components are going through a very tight and careful inspection and then are ultrasonic cleaned to insure an optimal adhesion of our sealing epoxy compound.

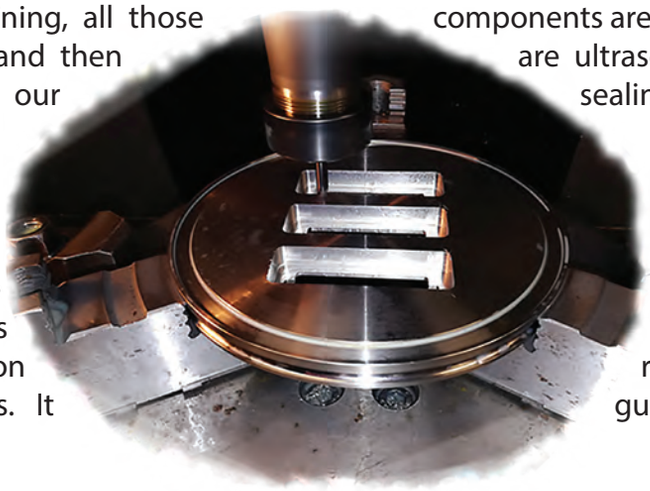

The connectors are always supplied by the most professional sources selected as military grade items (space grade upon request) with hard gold plating of the contacts. It guaranties reliability and durability .

We are proud to say that many of our parts delivered almost 20 years ago are still in use !

Plug In - know how
Assemby and Integration

Since the very first day PLUG IN is commited to deliver the very best hermetic feedthroughs because the research facilities as well as space testing laboratories simply need them.

Our research, which is based on the analysis of technical processes in our production activities at the artisanal scale, favors approaches of know-how and techniques based on the accumulation of knowledge and practical experience in the manufacture of our hermetic products.

They tend to respond to two types of objectives:

1 - Deepen the knowledge and transmission of knowledge and know-how in our production activities

2 - Set up, with the concerned employees, the processes to highlight and transmit the know-how and techniques to future employees

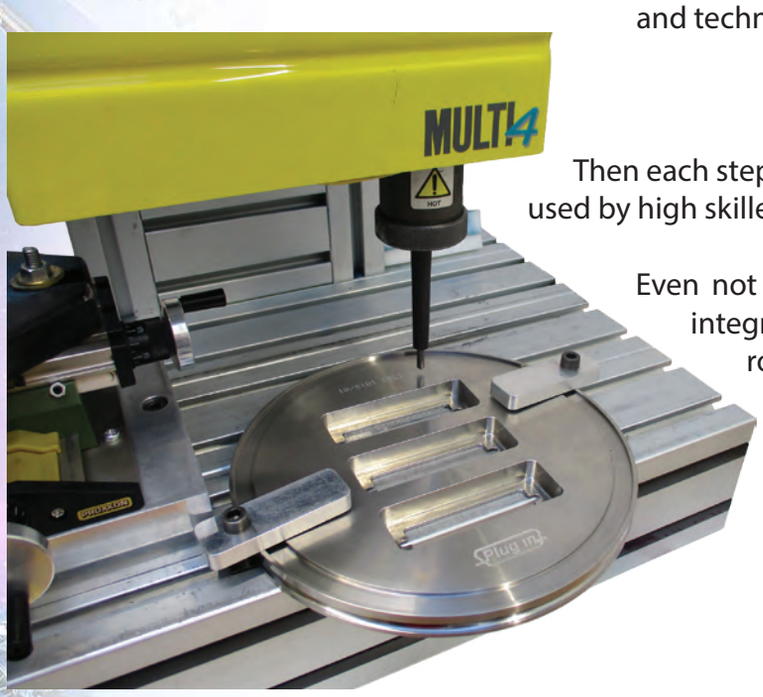

Then each step of the assembly involves dedicated toolings used by high skilled employees.

Even not using white clean rooms, all assembly and integration is done only into three « grey » clean rooms.

A special care has been given to the light, safety and comfort of our collegues with a strong focus on both the maintenance and replacement of toolings to insure Precision, Repeatability and then Quality.

MODUL-R hermetic feedthrough range for MIL-DTL-38999 connectors

The connectors used by the United States Department of Defense were originally developed in the 1930s for aeronautical and tactical service applications. The "AN" (Army-Navy) types have set the standard for modern military circular connectors. These connectors, and their evolutionary derivatives, are often called Military Standard connectors, MIL-STD or (informally) "MIL-SPEC" or sometimes "MS". They are now used in space, aerospace, industrial, marine and even automotive applications. MIL-DTL-38999 describes four series of miniature, high density, bayonet, threaded, or breech coupling, circular, environment resistant, electrical connectors using removable crimp or fixed solder contacts

With the MODUL-R range, Plug In offers an extensive array of hermetic connector feedthroughs and the ability to deliver standard or custom designed solutions to meet the highest requirements.

- **EMI Shielding** - solid metal to metal coupling, grounding fingers, electroless nickel plating, and thicker wall sections provide superior EMI shielding capability of 65dB minimum at 10 GHz.
- **Contact Protection** - recessed pins in this 100% scoop-proof connector minimize potential contact damage.
- **Moisture Resistance** - improved interfacial seal design helps prevent electrolytic erosion of contacts.
- **Lockwiring Eliminated** - unique, self-locking, quick coupling connector eliminates lockwiring .
- **Quick Coupling** - completely mates and self-locks in a 360° turn of the coupling nut

Environmental and electrical data

- **Durability** :
  Connector halves shall be mated and unmated 250 times for serie II with ground fingers and 500 times for series I and III at a rate not exceeding 300 cycles per hour.

- **Insulation resistance** :
  An insulation resistance test shall be performed on unmated connectors according MIL-STD-202, method 302, test condition B. Measurement shall be made between three pairs of adjacent contacts and the shell. Failure to meet the minimum requirement of 50 000 megohms for classes E, P, F, R and T shall be cause for rejection.

18 Shell sizes from 1 to 79 contacts
5 contact sizes from 22 to 8
Nearly 100 different contact arrangements

MODUL-R technical informations

Test voltages, ac rms, 60 Hz

Altitude	Service rating M		Service rating N		Service rating I		Service rating II	
	Mated	Unmated	Mated	Unmated	Mated	Unmated	Mated	Unmated
Sea level	1300	1300	1000	1000	1800	1800	2300	2300
50,000 feet	800	550	600	400	1000	600	1000	800
70,000 feet	800	350	600	260	1000	400	1000	500
100,000 feet	800	200	600	200	1000	200	1000	200

Wire sizes and diameters.

Contact size	Wire size (AWG)	Finished wire outside dimensions			
		minimum		maximum	
		Inches	mm	Inches	mm
22D	28, 26, 24, 22	.030	0.76	.054	1.37
22M **1/**	28, 26, 24	.030	0.76	.050	1.27
22 **1/**	26, 24, 22	.034	0.86	.060	1.52
20	24, 22, 20	.040	1.02	.083	2.11
16	20, 18, 16	.065	1.65	.109	2.77
12	14, 12	.097	2.46	.142	3.61
10	10	.135	3.42	.162	4.12
8 coax	M17/95-RG180 **2/**	.135	3.43	.155	3.94
8 twinax	M17/176-00002 **3/**	.124	3.15	.134	3.40

1/ Inactive for new design.
2/ MIL-DTL-17
3/ Applicable insert arrangements : 19-18, 21-75, 9-1, 17-2, 25-7, 25-8, 25-20, 25-46 and 25-90

Installing and removal forces.

Contact size	Installing and removal forces (maximum)	
	Pounds	Newtons
22D	10	44
22M 1/	10	44
22 1/	10	44
20	20	89
16	20	89
12	30	133
10	35	156
8 Triax	35	156

1/ Inactive for new design.

MODUL-R technical informations

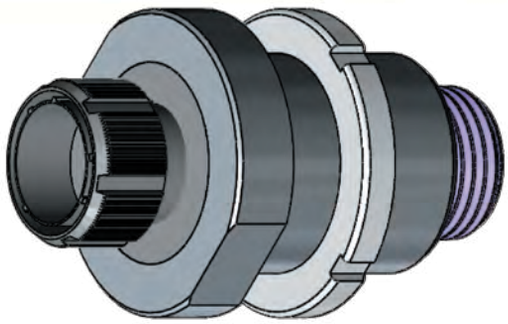

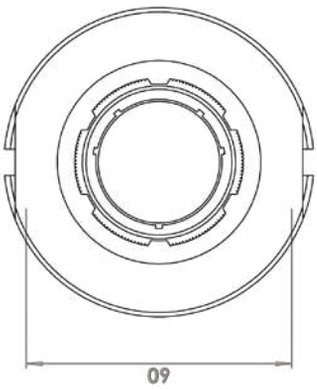

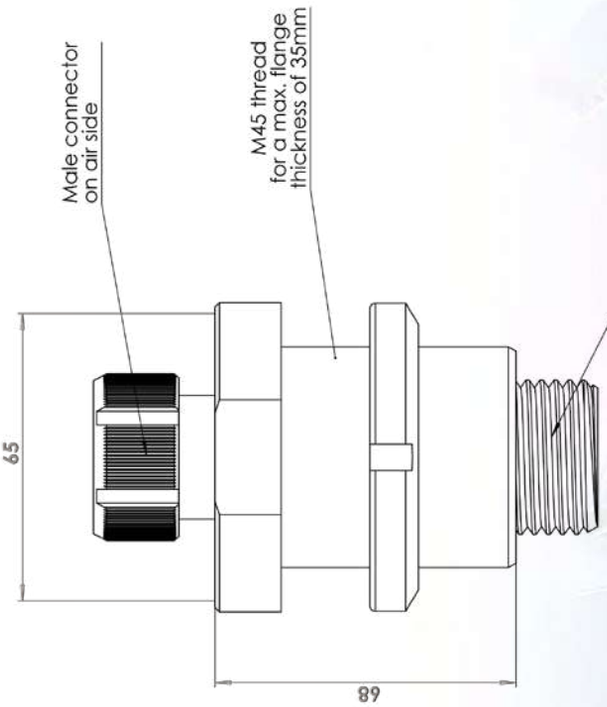

The Know-How in Hermetic Feed-Throughs

Plug in ®

MODUL-R technical informations

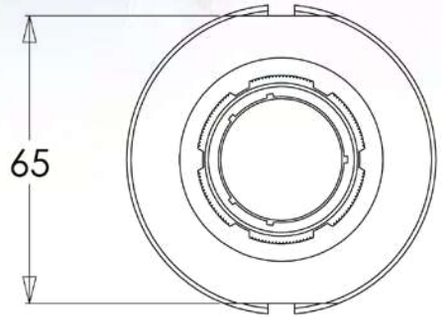

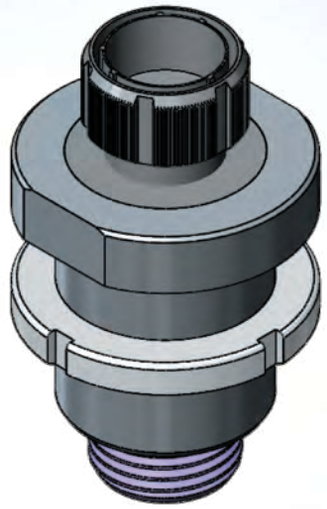

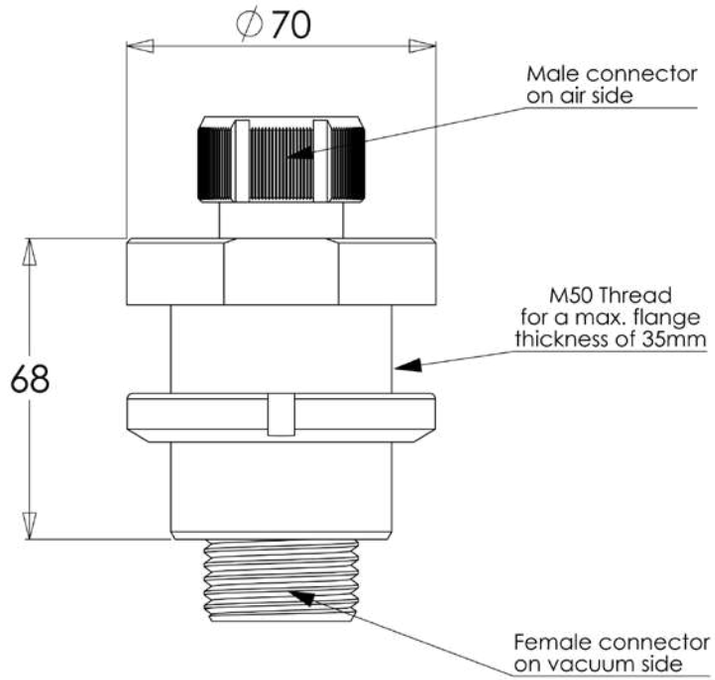

Note :

Specifications are subject to change without notice. All statments, informations and data provided herein are believed to be accurate and reliable but are presented without guarantee, warranty or reponsaibility of any kind, expressed or implied.

Plug In 5 rue du corps franc du sidobre F-81210 ROQUECOURBE				Echelle: 1:1	Ce document est la propriété exclusive de la société Plug In. Toute reproduction est interdite sans l'accord de la société Plug In
					Famille: Modul-R
	Nom	Date	Tolérance générale		
Dess.	AS	13/01/09	±0.1 /2°	Format: A3	TITLE: Customer drawing Modul-R-19
Ver.			Etat de surface Ra 1.6		
Appr.					
			Mat.		N° article:
			Fin.		
Ind.	Dess.	Desc.	Date	Trait. th.:	Indice: NC — Page : 1 de 1

MODUL-R technical informations

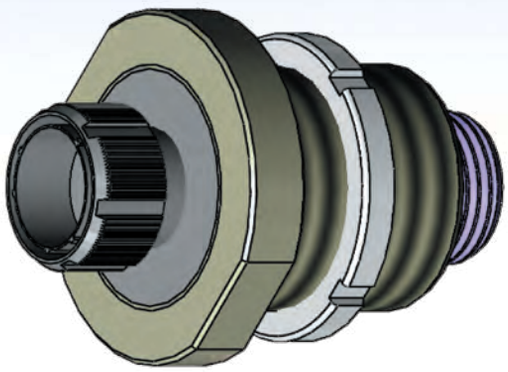

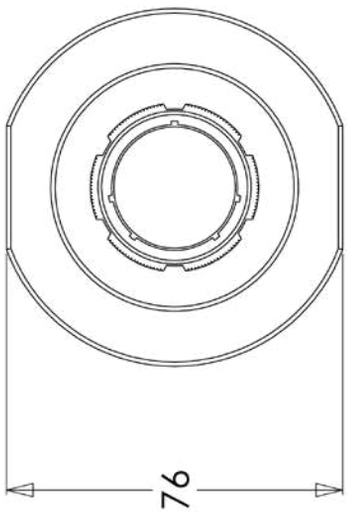

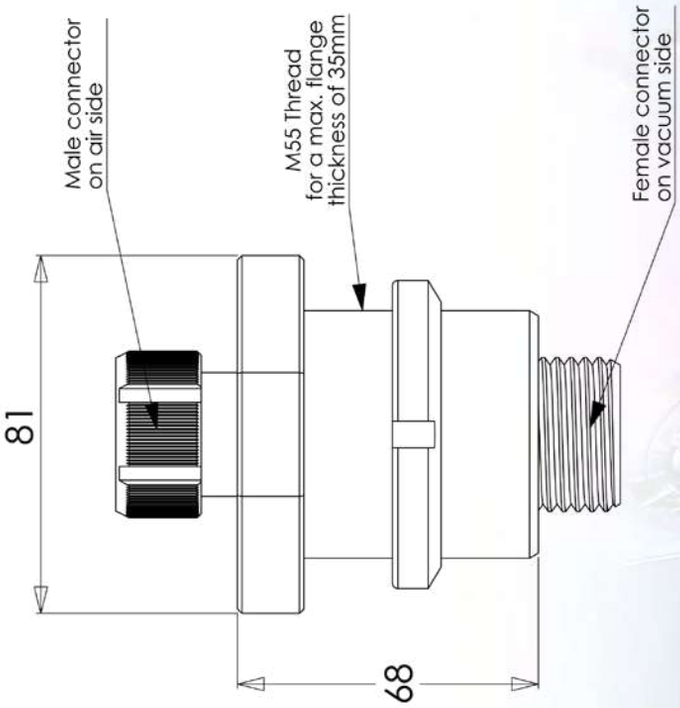

Note :

Specifications are subject to change without notice. All statments, informations and data provided herein are believed to be accurate and reliable but are presented without guarantee, warranty or responsability of any kind, expressed or implied.

Plug In S.A.R.L du capital de 8 000 000 F R.C.S. 310 ROUBAIX COMINE

Crés.	AS	Date	13/01/09
Ver.			
Appr.			

Tolérance générale ±0.1 /2°

Etat de surface Ra 1.6

Mat.

Fin.

Trait. th.:

Date

Desc.

Dess.

Ind.

Echelle: 1:1

Format: A3

Famille: Modul-R

TITLE: Customer drawing Modul-R-21 to25

N° articles:

Indice: NC

Page : 1 de 1

MODUL-R insert arrangements

Front face of pin inserts illustrated

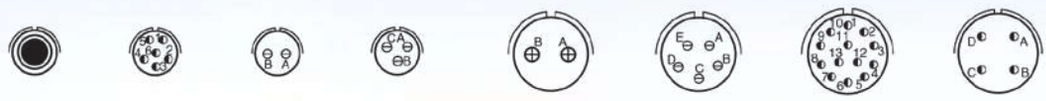

Insert Arrangement	9-5	9-35	9-94	9-98	11-2	11-5	11-35	11-54
Service Rating	Grounded	M	M	I	I	I	M	II
Number of Contacts	1	6	2	3	2	5	13	4
Contact Size	8 Twinax	22D	20	20	16	20	22D	22D

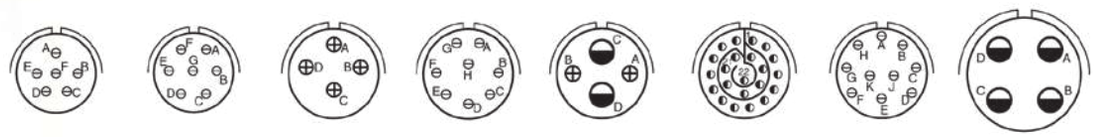

Insert Arrangement	11-98	11-99	13-4	13-8	13-13	13-35	13-98	15-4
Service Rating	I	I	I	I	I, Fiber Optic	M	I	I
Number of Contacts	6	7	4	8	2 2	22	10	4
Contact Size	20	20	16	20	16 12	22D	20	12
					Dedicated to Fiber Optics			

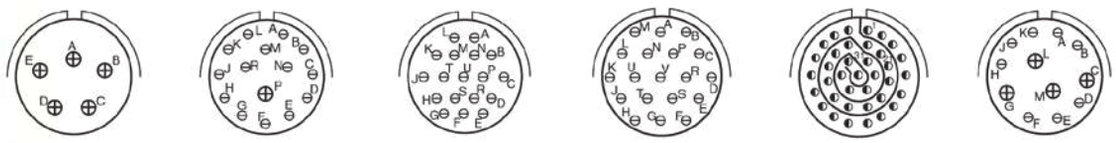

Insert Arrangement	15-5	15-15	15-18	15-19	15-35	15-97
Service Rating	II	I	I	I	M	I
Number of Contacts	5	14 1	18	19	37	8 4
Contact Size	16	20 16	20	20	22D	20 16

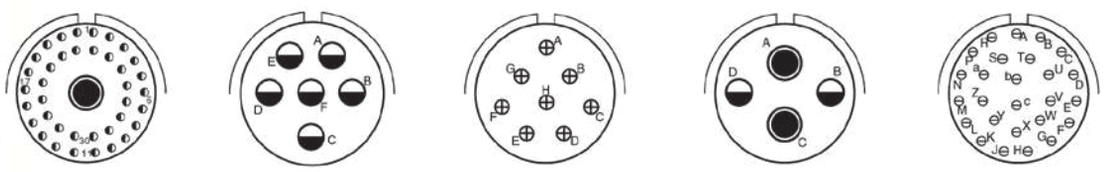

Insert Arrangement	17-2	17-6	17-8	17-22	17-26
Service Rating	M	I	II	Coax	I
Number of Contacts	38 1	6	8	2 2	26
Contact Size	22D 8 Twinax	12	16	12 Coax 8 Coax	20

CONTACT LEGEND 8 10 12 16 20 22D

MODUL-R technical informations

Front face of pin inserts illustrated

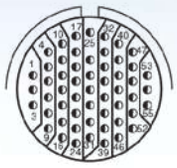

Insert Arrangement	17-35
Service Rating	M
Number of Contacts	55
Contact Size	22D

Insert Arrangement	17-99	
Service Rating	I	
Number of Contacts	21	2
Contact Size	20	16

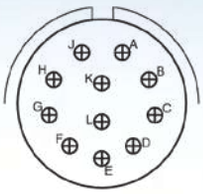

Insert Arrangement	19-11
Service Rating	II
Number of Contacts	11
Contact Size	16

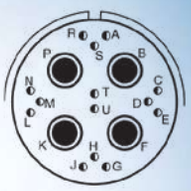

Insert Arrangement	19-18	
Service Rating	M	
Number of Contacts	14	4
Contact Size	22D	8 Twinax

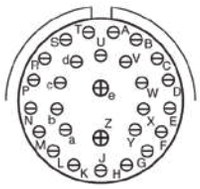

Insert Arrangement	19-28	
Service Rating	I	
Number of Contacts	26	2
Contact Size	20	16

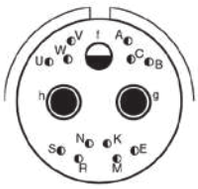

Insert Arrangement	19-31	
Service Rating	M	
Number of Contacts	2	1 12
Contact Size	8 Coax	12 22D

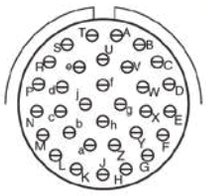

Insert Arrangement	19-32
Service Rating	I
Number of Contacts	32
Contact Size	20

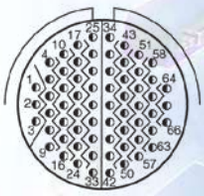

Insert Arrangement	19-35
Service Rating	M
Number of Contacts	66
Contact Size	22D

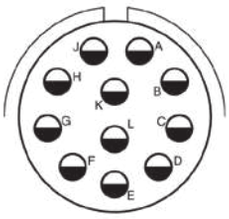

Insert Arrangement	21-11
Service Rating	I
Number of Contacts	11
Contact Size	12

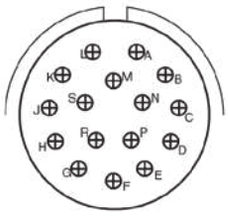

Insert Arrangement	21-16
Service Rating	II
Number of Contacts	16
Contact Size	16

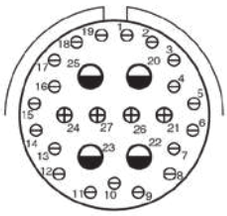

Insert Arrangement	21-29	
Service Rating	I	
Number of Contacts	19	4 4
Contact Size	20	16 12

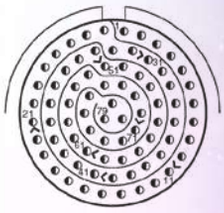

Insert Arrangement	21-35
Service Rating	M
Number of Contacts	79
Contact Size	22D

CONTACT LEGEND

8	10	12	16	20	22D

MODUL-R insert arrangements

Front face of pin inserts illustrated

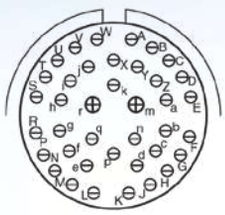
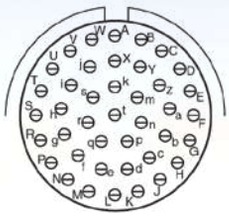
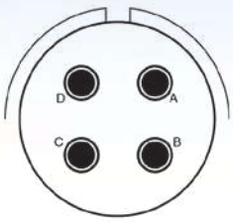
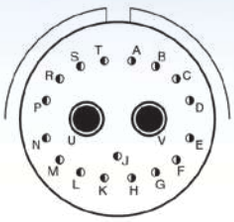

Insert Arrangment	21-39		21-41	21-75	21-79	
Service Rating	I		I	M	II	
Number of Contacts	37	2	41	4	17	2
Contact Size	20	16	20	8 Twinax	22D	8 Coax

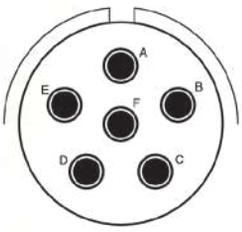
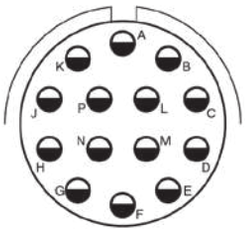
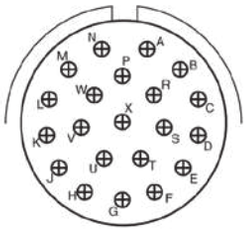

Insert Arrangement	23-6	23-14	23-21
Service Rating	M	I	II
Number of Contacts	6	14	21
Contact Size	8 Twinax	12	16

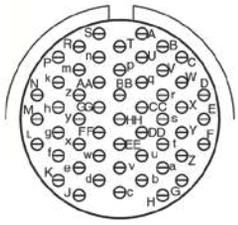
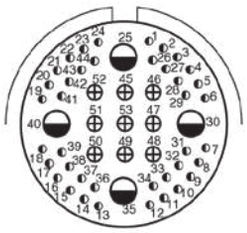
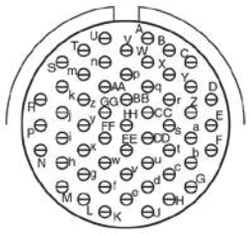

Insert Arrangement	23-53	23-54		23-55
Service Rating	I	M		I
Number of Contacts	53	40	9	4	55
Contact Size	20	22D	16	12	20

CONTACT LEGEND 8 10 12 16 20 22D

MODUL-R technical informations

Front face of pin inserts illustrated

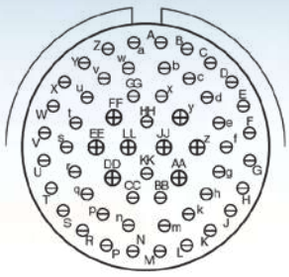

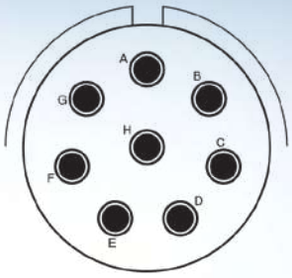

Insert Arrangement	25-4	25-8
Service Rating	I	Twinax
Number of Contacts	48 8	8
Contact Size	20 16	8 Twinax

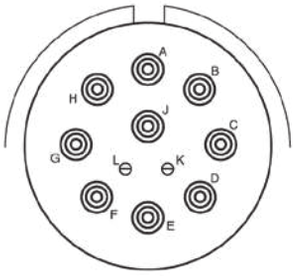

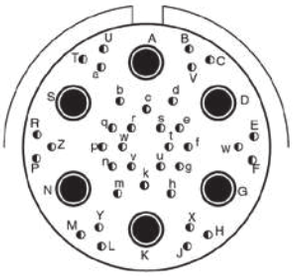

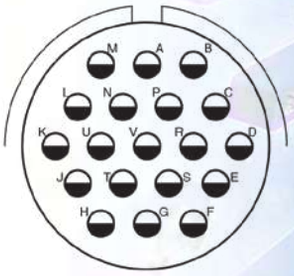

Insert Arrangement	25-11	25-17	25-19
Service Rating	N	M	I
Number of Contacts	2 9	36 6	19
Contact Size	20 10 Power	22D 8 Twinax	12

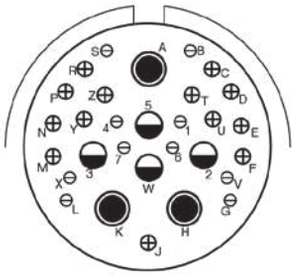

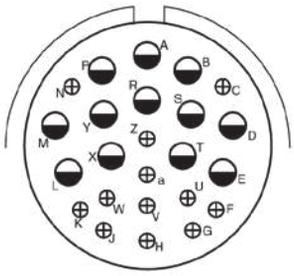

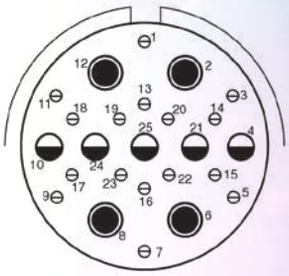

Insert Arrangement	25-20	25-24	25-26
Service Rating	N	I	I
Number of Contacts	10 13 3 4	12 12	16 5 4
Contact Size	20 16 8 Twinax 12 Coax	16 12	20 12 8 Coax
	(With Matched Impedance)		

CONTACT LEGEND 8 10 12 16 20 22D

MODUL-R insert arrangements

Front face of pin inserts illustrated

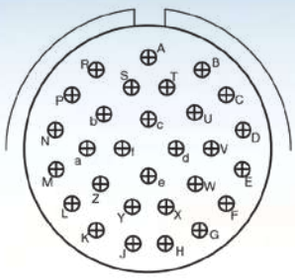

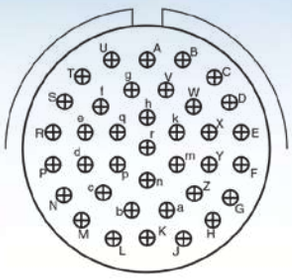

Insert Arrangement	25-29	25-37
Service Rating	I	I
Number of Contacts	29	37
Contact Size	16	16

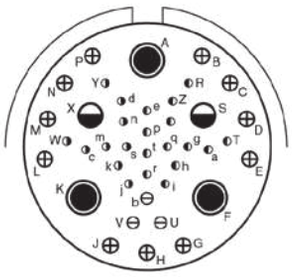

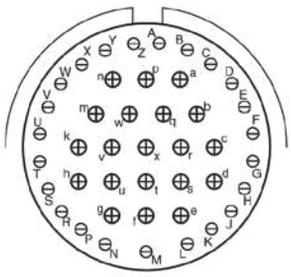

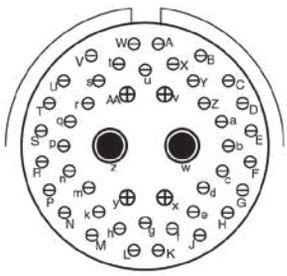

Insert Arrangement	25-41					25-43		25-46			
Service Rating	N/Inst.					I		I			
Number of Contacts	22	3	11	2	3	23	20	40	4	2	
Contact Size	22D	20	16	12 Coax	8 Twinax	20	16	20	16	8 Coax†	

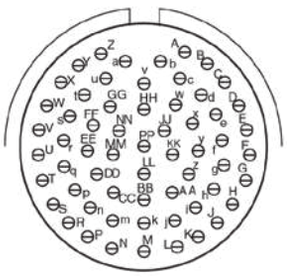

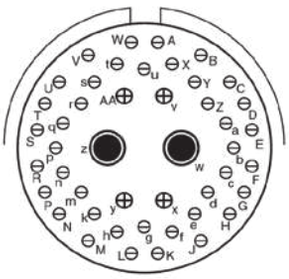

Insert Arrangement	25-61	25-90		
Service Rating	I	I		
Number of Contacts	61	40	4	2
Contact Size	20	20	16	8 Twinax

† Coax contacts for RG180/U or RG195/U cable.

CONTACT LEGEND: 8, 10, 12, 16, 20, 22D

Modul-R manufacturing examples

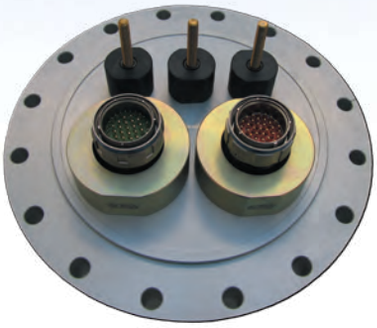

MODUL-R ordering informations

MODULR	23	21	M/F	3	ND

Series prefix MODUL-R

Module sizes (insert)
9 / 11 / 13 / 15 / 17 / 19 / 21 / 23 / 25

Number of contacts
Insert 9 : 1, 6, 2 and 3
Insert 11 : 2, 5, 13, 4, 6 and 7
Insert 13 : 4, 8, 4M*, 22 and 10
Insert 15 : 4, 5, 15M*, 18, 19, 37 and 12M*
Insert 17 : 39M*, 6, 8, 4M*, 26, 55 and 23M*
Insert 19 : 11, 18M*, 28M*, 15M*, 32 and 66
Insert 21 : 11, 16, 27M*, 79, 39M*, 41, 4 and 19M*
Insert 23 : 6, 14, 21, 53, 53M* and 55
Insert 25 : 56M*, 8, 11M*, 42M*, 19, 30M*, 24M*
25M*, 29, 37, 41M*, 43M*, 46M*, 61 and 66M*

Connector gender
M/F

Shell type
Series
3

Contact type
C = Coxial contact size 8
HD = High density contact size 22
ND = Normal density contact size 20
P1 = Power contact size 8
P2 = Power contact size 12
P3 = Power contact size 16
TW = Twinax contact size 8

* M = Mixed arrangement

Vacuum unit converter

Example : 1 mbar = 1.10^{-3} bar

	Pascal	bar	1 kg / cm^{-2} or at	atm
1 Pascal	1	1.10^{-5}	$1,0197.10^{-5}$	$9,8692.10^{-4}$
1 bar	1.10^{5}	1	1,0197	$9,8692.10^{-1}$
1 kg / cm^{-2} or at	$9,8067.10^{4}$	$9,8067.10^{-1}$	1	$9,6784.10^{-1}$
1 atm (atmosphere)	$1,0133.10^{5}$	1,0133	1,0333	1
1 torr	$1,3332.10^{2}$	$1,3332.10^{-3}$	$1,3595.10^{-3}$	$1,3158.10^{-3}$
1 mbar	1.10^{2}	1.10^{-3}	$1,0197.10^{-3}$	$9,8692.10^{-4}$
1 inch Hg	$3,386.10^{3}$	$3,386.10^{-2}$	$3,453.10^{-2}$	$3,345.10^{-2}$
1 PSI	$6,8948.10^{3}$	$6,8948.10^{-2}$	$7,0306.10^{-2}$	$6,8046.10^{-2}$

	torr	mbar	inch Hg	PSI
1 Pascal	$7,5006.10^{-3}$	1.10^{-2}	$2,953.10^{-4}$	$1,4503.10^{-4}$
1 bar	$7,5006.10^{2}$	1.10^{3}	$2,953.10^{1}$	$1,4503.10^{1}$
1 kg poids cm^{-2} ou at	$7,3556.10^{2}$	$9,8068.10^{2}$	28,96	14,22
1 atm (atmosphere)	760	1013	$2,995.10^{1}$	$1,42247.10^{1}$
1 torr	1	1,3332	$3,937.10^{-2}$	$1,9337.10^{-2}$
1 mbar	$7,5006.10^{-1}$	1	0,02953	$1,4503.10^{-2}$
1 inch Hg	$2,540.10^{1}$	$3,386.10^{1}$	1	$4,910.10^{-1}$
1 PSI	$5,1715.10^{1}$	$6,8947.10^{1}$	2,041	1

	Pa m3/s	mbar l/s	Torr l/s	atm cm3/s
Pa m3/s	1	10	7,5	9,87
mbar l/s	0,1	1	0,75	0,987
Torr l/s	0,133	1,33	1	1,32
atm cm3/s	0,101	1,01	0,76	1

Temperature		
℃	K	F
100	373,15	212
80	353,15	176
60	333,15	140
40	313,15	104
20	293,15	68
0	273,15	32
-20	253,15	-4
-40	233,15	-40
-60	213,15	-76
-80	193,15	-112
-100	173,15	-148
-120	153,15	-184
-140	133,15	-220
-160	113,15	-256
-180	93,15	-292
-200	73,15	-328

Hermetic feedthrough and equiped flanges test equipment

The knowledge necessary for the study, the engineering, the design, the production and finally the test of the finished product are not externalizable in our field of activity. Testing is unavoidable and has always been one of the most important issue after manufacturing our modular hermetic feedthroughs. It is the major criterion so that products can be delivered to the customer.

Every single feedthrough or multiple feedthroughs already mounted on flanges, are submited to a test by skilled testers on our flexible leakrate test bench. The various elements constituting the test bench are periodically calibrated by an external service provider to ensure the accuracy of the measures taken.

At Plug In we have all the test interfaces that allow us to test our own modular hermetic feedthrough production, but also to test pre-mounted flange assemblies with a nominal diameter of up to 800 mm.

With our cable testers and harness testers, find defective or miswired cables instantly before they damage equipment or waste valuable technician time. CableEye cable testers and harness testers have a unique, patented graphic wiring display to visually pinpoint problems when wiring errors are detected, and offer one-second pass/fail testing for production environments. Quickly locate intermittent connections and identify their position in the cable. With our Model M3U tester, set two resistance thresholds, one for good connections down to 0.3 ohms, and one for isolation up to 10 Megohms. Measure embedded resistors and resistor networks, check the orientation of diodes, and measure diode forward voltage.

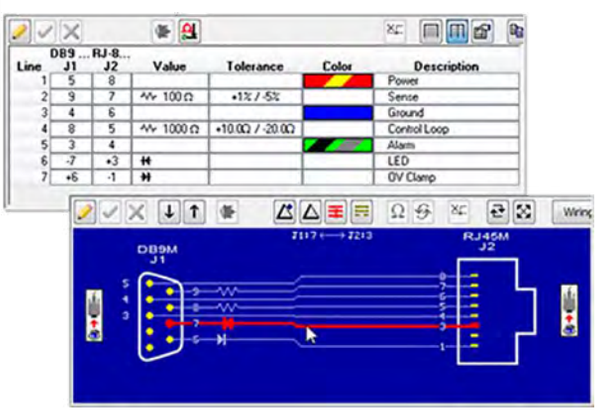

The screen image to the right illustrates how the software shows diodes and resistors in wiring schematics. Model M3U use a USB interface to provide high speed scanning for intermittent connections.

Hermetic feedthrough test equipment and storage

Quickly locate intermittent connections and identify their position in the cable. We can expand CableEye to over 2000 test points for large cables and wiring harnesses, and measure cables of up to 4000 feet in length.

Our product concept allows the production of any type of hermetic feedthrough with any type of connector available on the market. The main advantage of this electrical test equipment lies in the fact that, just like us, the manufacturer can produce any type of test board configuration based on any type of connector.

The ability to realize almost any hermetic feedthrough from any type of connector requires optimal inventory management to ensure customers respectful deadlines of their test planing. It is easy to imagine the level of component stock that we must have within the company to respond positively to this expectation.

With several ten thousands of components in stock we have invested in a rotating automated storage unit that allows:

- Maximum capacity on minimum area
- Protection of references ...
- Speed of access
- Location Management
- Logistics performance

Thus we are able to ensure this responsiveness and respond as soon as possible to calls for tenders and production of products.

Information sources within this Handbook

The standards that define connectors used with our feedthroughs are constantly evolving due to the extremely rapid evolution of technologies. We thank the literature sources cited in this manual for making available to the public technical information on their know-how.

- Circular Miniature high performancetwist pin Connectors Micro-D & Nano-D, R ectangular & CircularH - AXON' CABLE SAS - AXON' D-LINE® - RELEASED FEBRUARY 2018/D' - www.axon-cable.com

- Coaxial connectors 4.3-10 Edition 2014 - HUBER+SUHNER AG, Radio Frequency Division, Degersheimerstrasse 14, 9100 Herisau, Switzerland

- CONNECTORS COAXIAL, RF & MICROWAVE Full Line Catalog - Radiall SA 25 Rue Madeleine Vionnet, 93300, Aubervilliers - www.radiall.com

- D-SUB MIXED LAYOUT CONNECTORS - FCT Elektronik GMBH - www.fctgroup.com

- HDMI Connector System - G45 Series - Amphenol Information Communications and Commercial Products - www.amphenol-icc.com

- MIL-STD-1553 Tutorial - MilesTek 301 Leora Ln., Suite 100 Lewisville, TX 75056 - www.milstek.com

- MIL-DTL-24308G - DETAIL SPECIFICATION, CONNECTORS, ELECTRIC, RECTANGULAR, NONENVIRONMENTAL, MINIATURE, POLARIZED SHELL, RACK AND PANEL, GENERAL SPECIFICATION FOR - 2 March 2009 - MIL-DTL-24308/1Kw/AMENDMENT2 - 1 April 2015 - Defense Supply Center Columbus, (DSCC-VAI), P.O. Box 3990, Columbus, OH 43218-3990

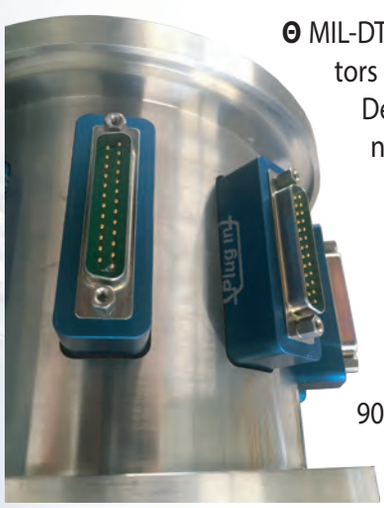

- MIL-DTL-38999 - Amphenol Tri-Start Subminiature Cylindrical Connectors - Amphenol Corporation, Amphenol Aerospace, 40-60 Delaware Avenue, Sidney, New York 13838-1395 - www.amphenol-aerospace.com

- RF Coaxial connectors General catalogue, Edition 2013/08 - HUBER+SUHNER AG, Radio Frequency Division, Degersheimerstrasse 14, 9100 Herisau, Switzerland

- Teledyne Reynolds, 1001 Knox Street, Torrance, California, 90502 - www.teledynereynolds.com

- Wikipedia, the free encyclopedia

Disclaimer

Products described within this handbook are protected by following patents :

01 08116
02 07868
06 04757

Other patents pending

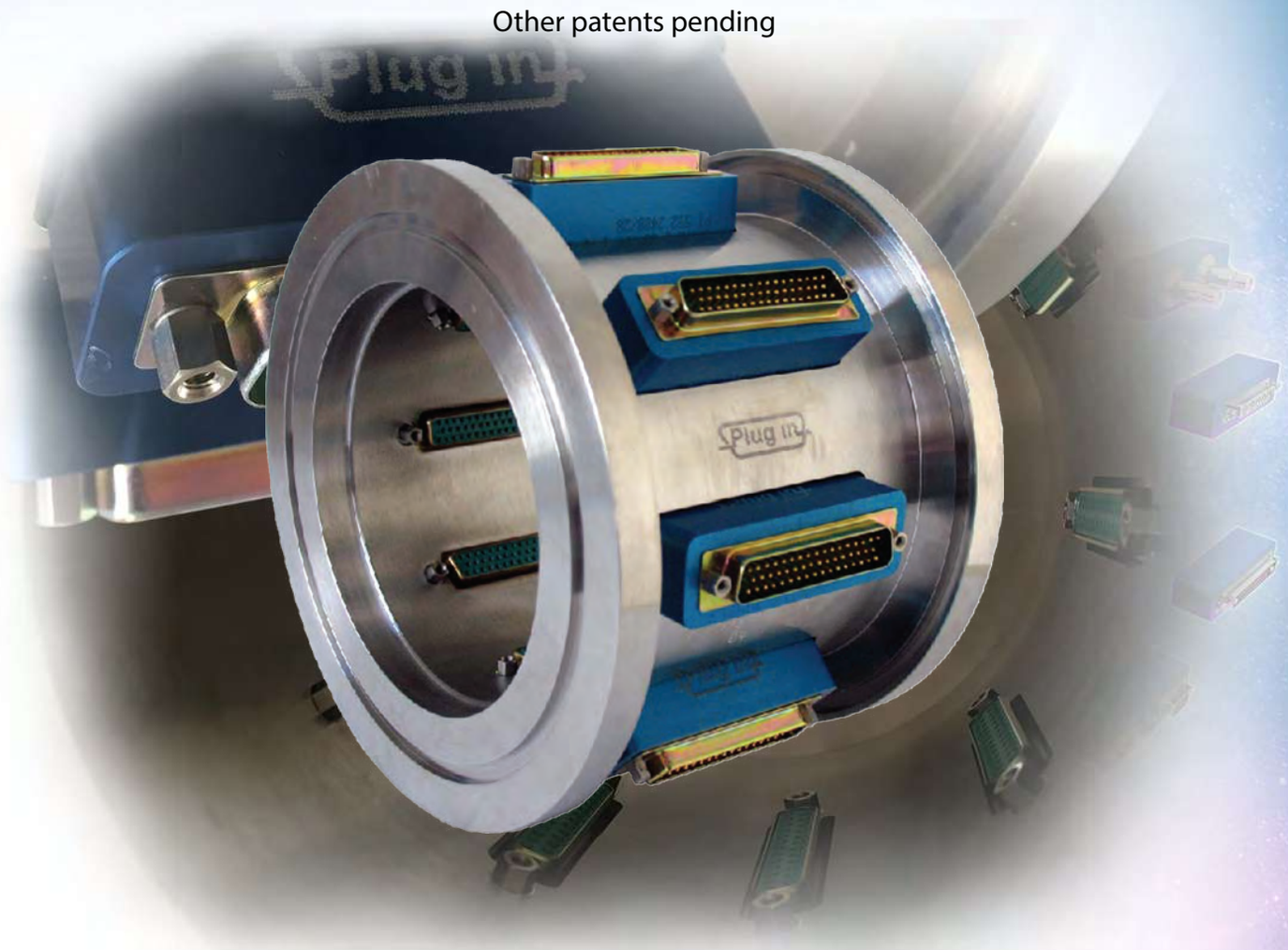

Plug In manufactures the finest quality product available to the marketplace, however these products are intended to be used in accordance with the specifications described in this handbook. Any use or application that deviates from the stated operating specifications is submitted to Plug In prior agreement and may be unsafe.

Specifications are subject to change without notice. Consult Plug In for latest design specifications. All statements, information and data provided herein are believed to be accurate and reliable but are presented without guarantee, warranty or responsibility of any kind, expressed or implied. The user should not assume that all safety measures are indicated or that other measures may not be required.

Drawing dimensions are in millimeters

The Know-How in Hermetic

Plug in

Feed-Throughs ®

Plug In Sarl
5, rue du corps franc du Sidobre
F-81210 ROQUECOURBE
Phone : +33 (0)563 82 50 60
E-mail : quality@plugin.fr

Please visit our web site for our sales network
www.plugin-vacuum.com